Commercial Tapware

Lead Free
AS 3718
23145

WATER RATING www.waterrating.gov.au 7.5 litres per minute

WATER RATING www.waterrating.gov.au 4.5 litres per minute

100% STAINLESS STEEL LEAD FREE

GUARDIAN® TAPWARE

Stainless Steel Lever Handle Swivel Sink Mixer

AS1428 Compliant

10 YEAR WARRANTY INCLUDING 2 YEAR ONSITE SUPPORT

T-3MLS4MIX

T-3MLS6MIX

- Full S/S Construction
- Lever Handle for Hands Free Operation
- Available in WELS 4 Star 7.5LPM or WELS 6 Star 4.5LPM
- Includes Flexi Hoses – ½" FI BSP
- Working Pressure Range 150kPa-500kPa
- Maximum Operating Temperature 80 Degrees
- Lever Handle to Comply with AS1428.1

Side

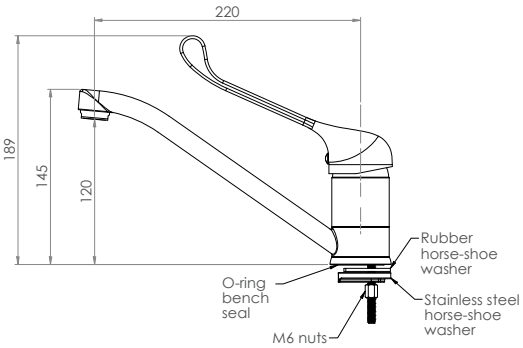

Top

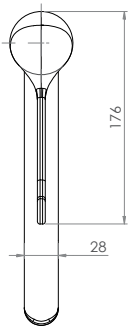

Front

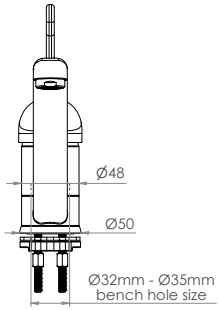

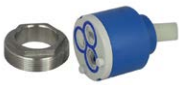

T-3MSSP-MIXCART

*Exclusions apply