# TOWER TOWER COUNTER SERIES HEATED

cossiga

# RF

STGRF6 STGRF6-SD
STGRF9 STGRF6-SD
STGRF12 STGRF12-SD
STGRF15 STGRF15-SD

- Heated double glazed glass top, sides and front
- Heated rear sub frame
- Argon filled rear doors
- Sliding rear doors
- Solid front or sliding front doors
- Deck forced refrigeration
- Two adjustable shelves - flat or angled
- Ticket strips on shelves and base
- Under shelf and canopy LED lights
- Integral condenser

Solid glass front - optional

STGRF6 hinged rear door

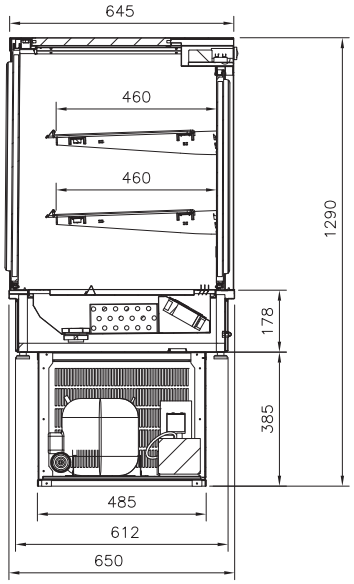


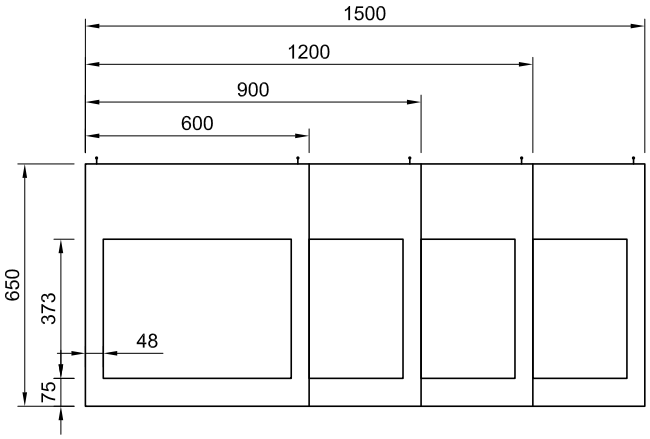


## CABINET DIMENSIONS & SPECIFICATIONS

| MODEL | CABINET | | | SHELVING | SHELVING | OPERATING TEMP | SHELF | BASE TRAY | TOTAL FOOD | DISPLAY $M^2$ | INTERNAL VOLUME $M^3$ | FREQUENCY | REFRIGERANT | POWER | | CONNECTION ELECTRICAL POWER CORD 2200MM | | VOLTAGE | PACKED FOR SHIPPING | | | |
|---|---|---|---|---|---|---|---|---|---|---|---|---|---|---|---|---|---|---|---|---|---|---|
| | LENGTH [MM] | DEPTH [MM] | HEIGHT [MM] | WEIGHT KG | | DEG C | W X D | W X D | 100MM UNITS | | | | | KW 230V | AMP | NZ/AUS 10 AMP | UK 13 AMP | | LENGTH [MM] | DEPTH [MM] | HEIGHT [MM] | WEIGHT |
| STGRF6 STGRF6-SD | 600 | 650 | 925 | 143 | 2 + BASE | 3-5 | 490 X 445 | 540 x 415 | 86 | 0.61 | 0.29 | 50 Hz | R290 | 1.01 | 4.3 | 3 PIN PLUG | 3 PIN PLUG | 220-240V | 700 | 730 | 1450 | 150 |
| STGRF9 STGRF9-SD | 900 | 650 | 925 | 178 | 2 + BASE | 3-5 | 790 X 445 | 840 x 415 | 136 | 0.96 | 0.45 | 50 Hz | R290 | 1.06 | 4.6 | 3 PIN PLUG | 3 PIN PLUG | 220-240V | 1000 | 730 | 1450 | 185 |
| STGRF12 STGRF12-SD | 1200 | 650 | 925 | 212 | 2 + BASE | 3-5 | 1090 X 445 | 1140 x 415 | 175 | 1.32 | 0.60 | 50 Hz | R290 | 1.15 | 5.0 | 3 PIN PLUG | 3 PIN PLUG | 220-240V | 1300 | 730 | 1450 | 219 |
| STGRF15 STGRF15-SD | 1500 | 650 | 925 | 243 | 2 + BASE | 3-5 | 1390 X 445 | 1440 x 415 | 285 | 1.67 | 0.75 | 50 Hz | R290 | 1.24 | 5.4 | 3 PIN PLUG | 3 PIN PLUG | 220-240V | 1600 | 730 | 1450 | 300 |

Maximum shelf load weight 15kg spread evenly

**SLIDING FRONT DOORS** and rear glass sliding doors STGRF-SD
**SOLID FRONT** and rear glass sliding doors STGRF

 Date Modified: 31/07/25 Check website for latest version

Download C.A.D models or contact us on COSSIGA.COM

# TOWER PLACED IN BENCH DETAIL

cossiga

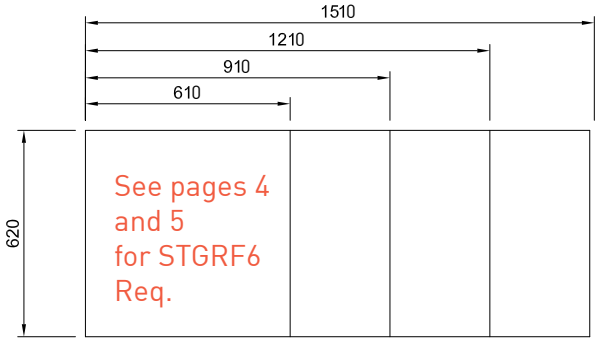


## benchtop cut out sizes

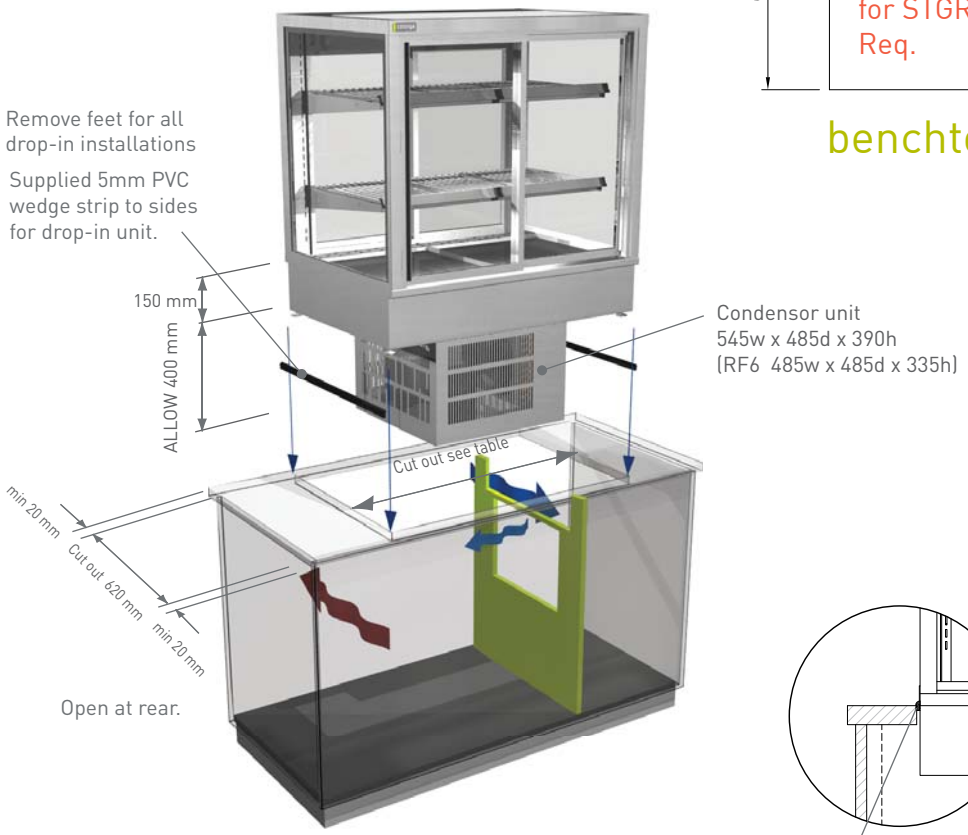


## Full bench top drop in

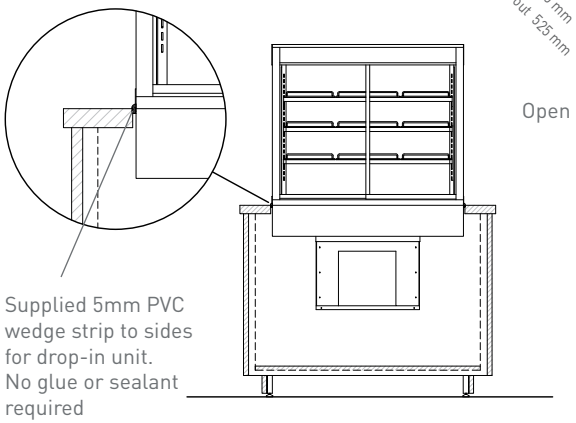


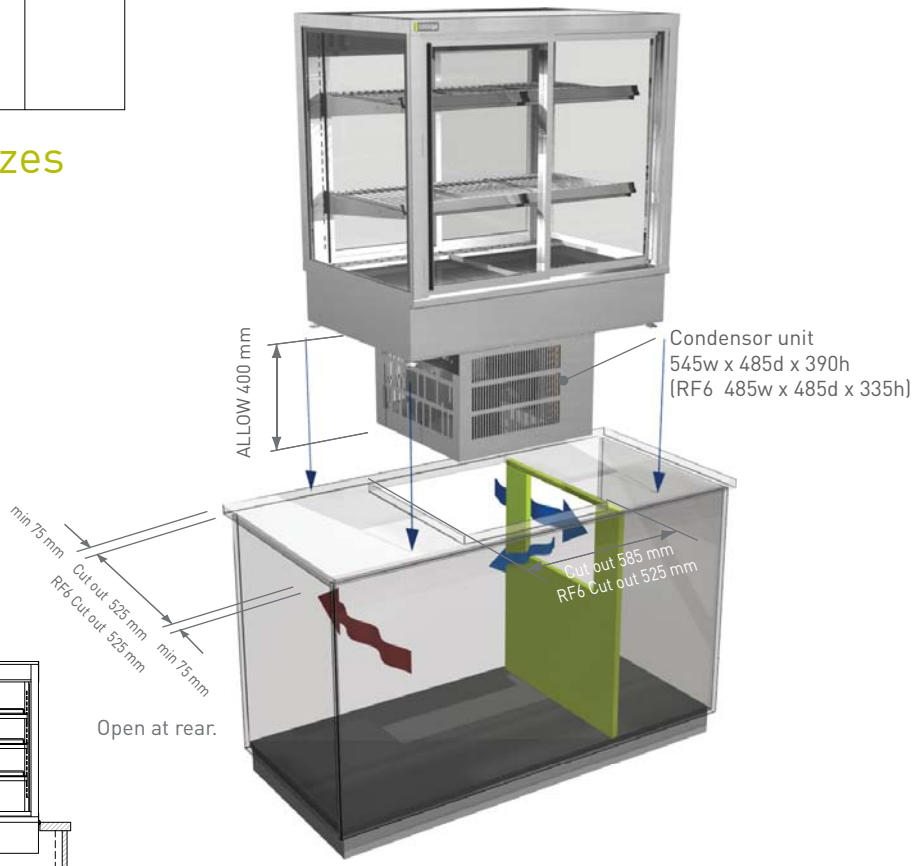


## On bench top drop in



Date Modified: 31/07/25 Check website for latest version

Download C.A.D models or contact us on COSSIGA.COM

REAR VIEW

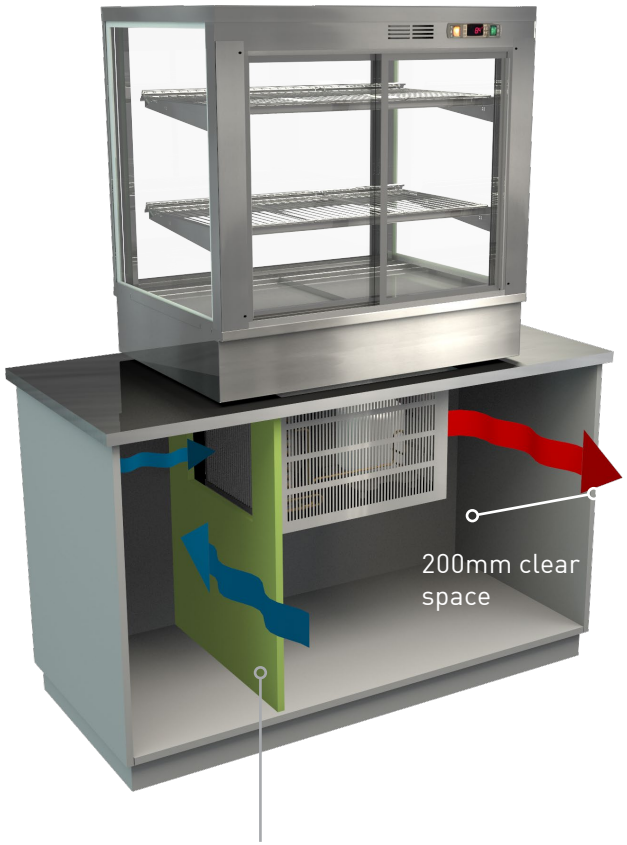


Hole Cut to meet condenser face

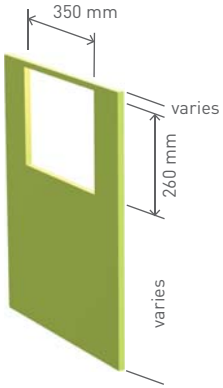


UNITS SHOWEN FROM REAR VIEW

REAR VIEW

## Ideal configuration cabinet open at rear

## Cabinet with vented rear doors

cossiga

## Full bench top drop in

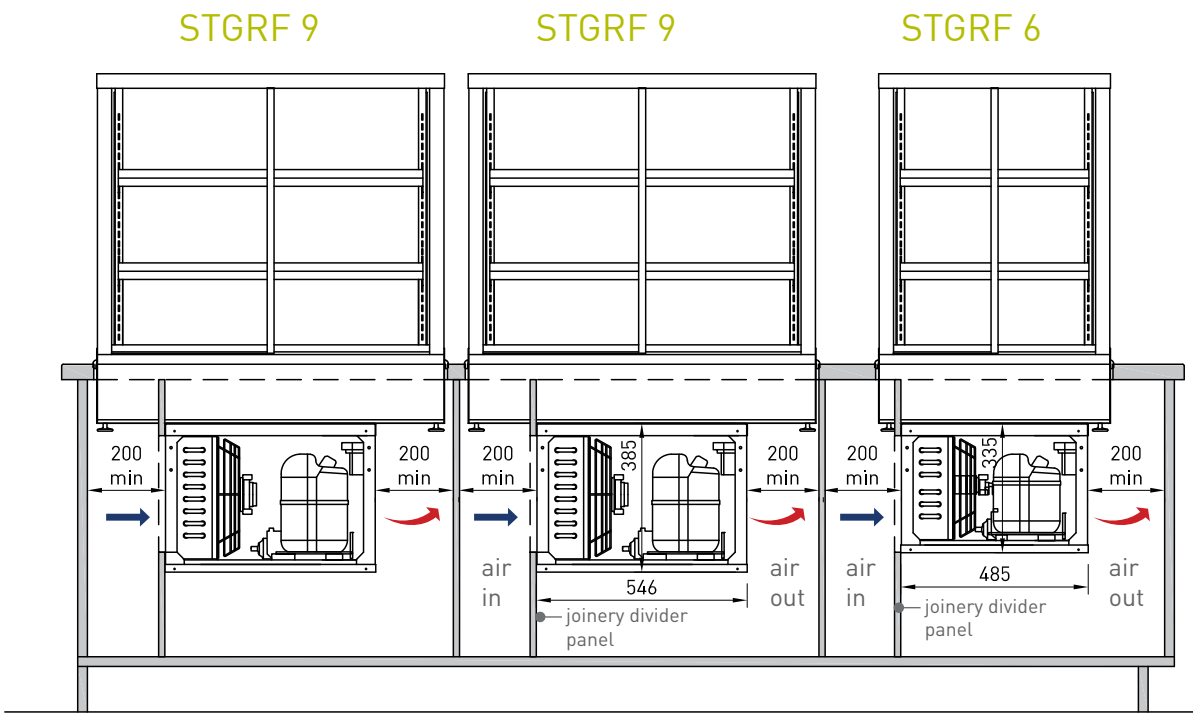


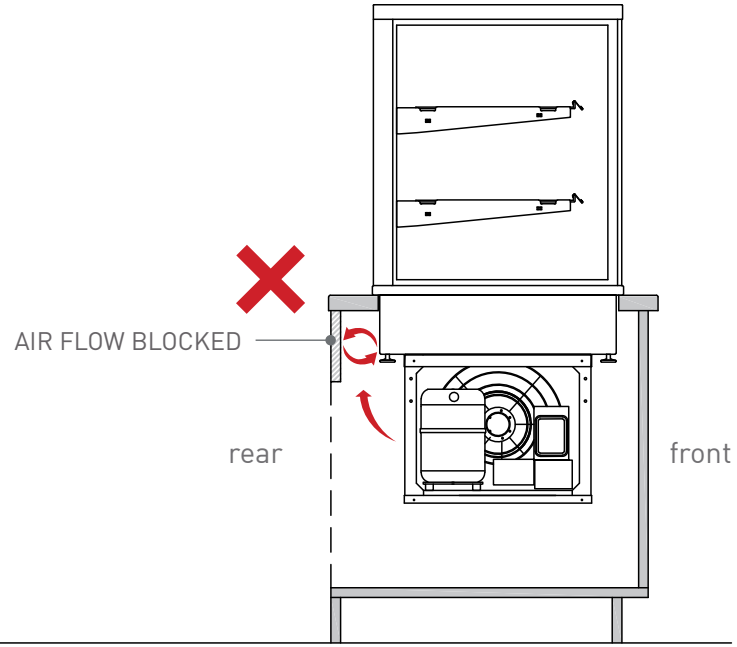


REAR VIEW

- A larger gap is required between STGRF6 units to allow minimum air flow requirements.

- Do not build drop down at rear of joinery as this will prevent hot air escaping



Download C.A.D models or contact us on COSSIGA.COM

cossiga

## On bench top drop in

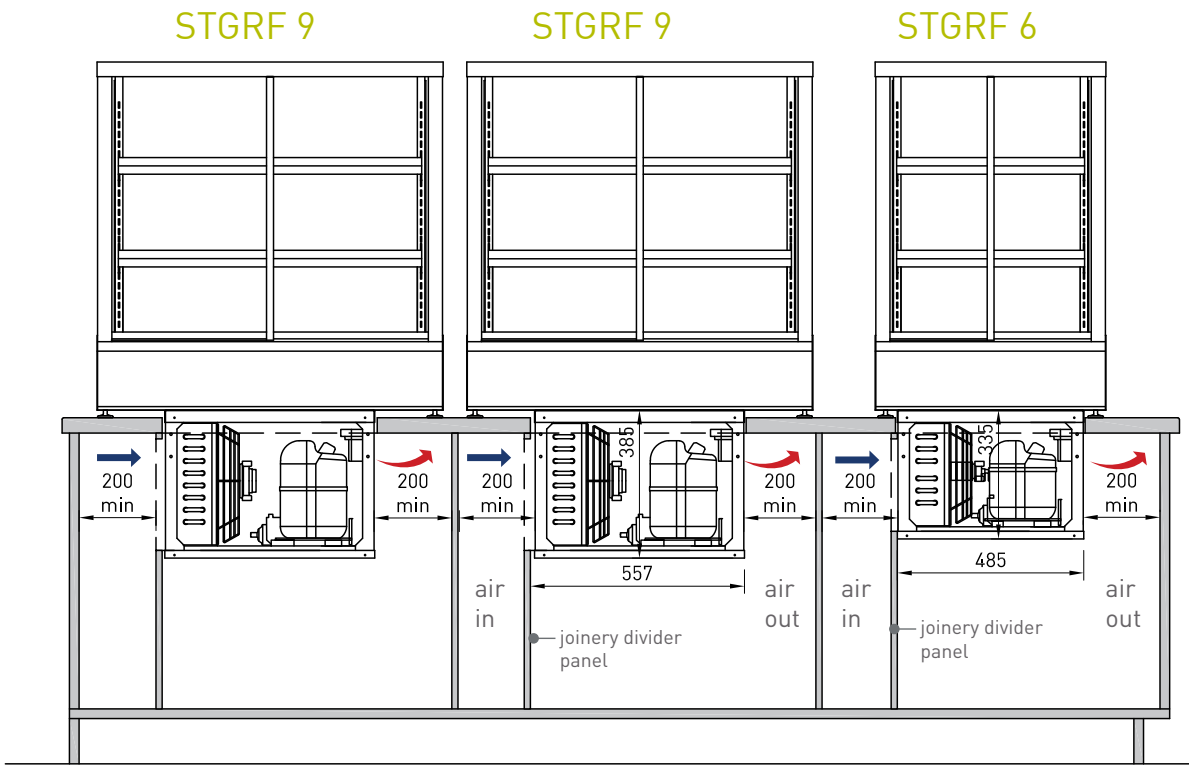


REAR VIEW

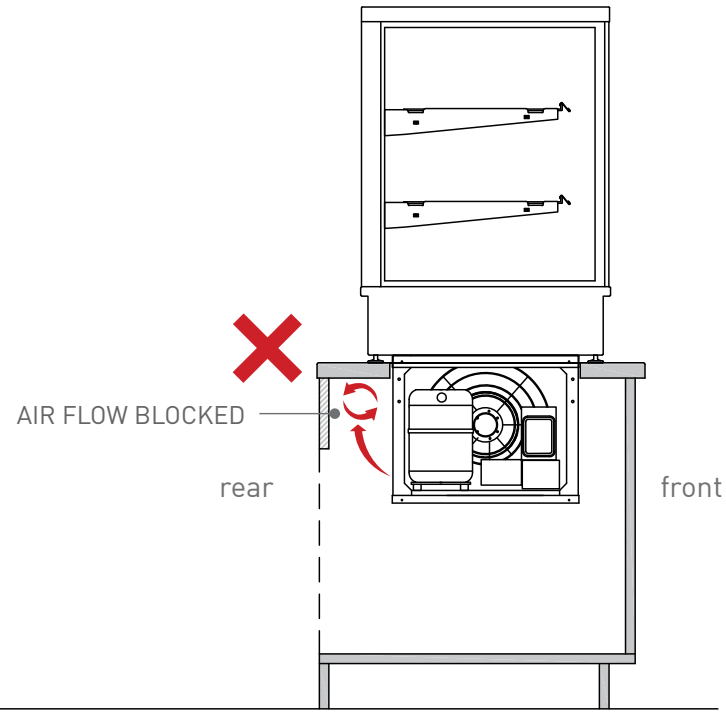


- A larger gap is required between STGRF6 units to allow minimum air flow requirements.
- Do not build drop down at rear of joinery as this will prevent hot air escaping



Download C.A.D models or contact us on COSSIGA.COM

# TOWER JOINERY TO REAR WALL WITH VENT

cossiga

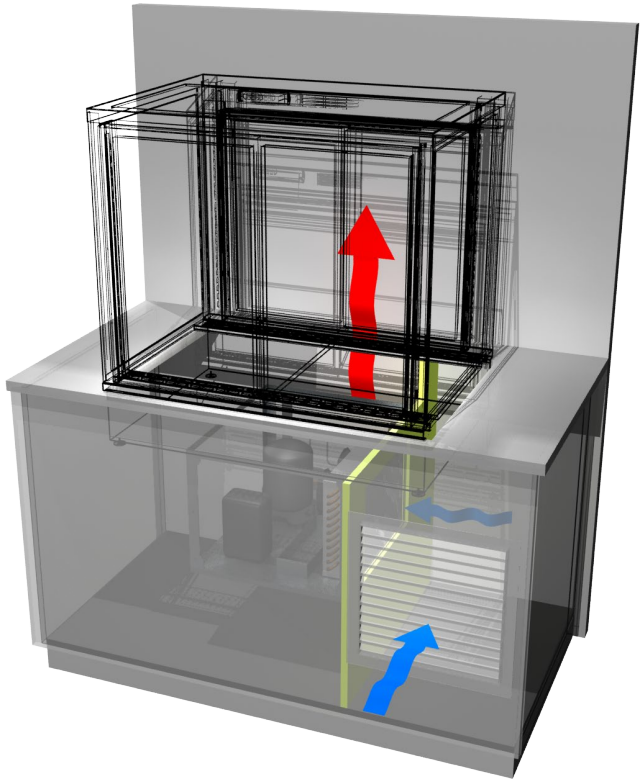

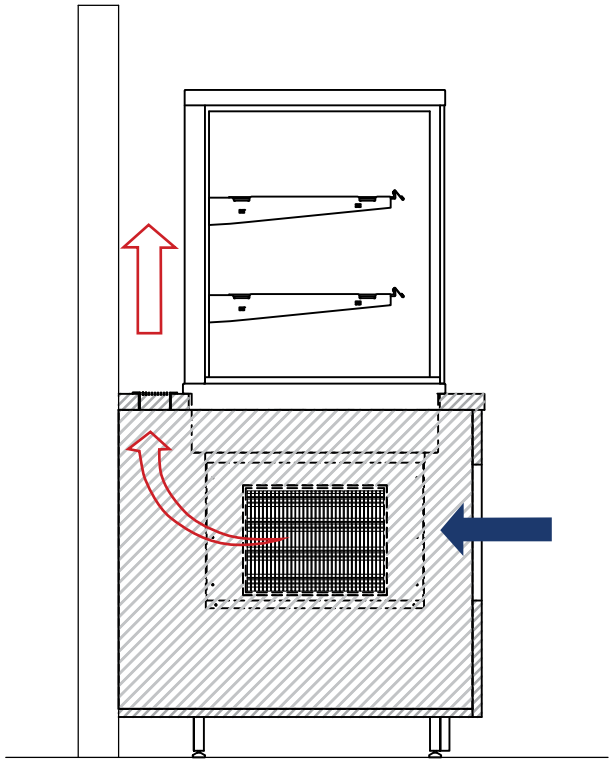

- Horizontal vent in cabinet top for hot air extract
- Electric biscuit fans can also be fitted to provide mechanical extract
- Ambient air ducted in to compressor face through air plenum space
- Joinery divider panel providing sealed air intake plenum with cut out to meet condensor face
- Allow access for cleaning, servicing and waste evaporator water removal

- Ambient air is drawn into front vented area
- Hot air must escape joinery cabinet
- A horizontal vent should be used behind the unit
- Vent must be at least 100mm deep and as wide as unit



Download C.A.D models or contact us on COSSIGA.COM

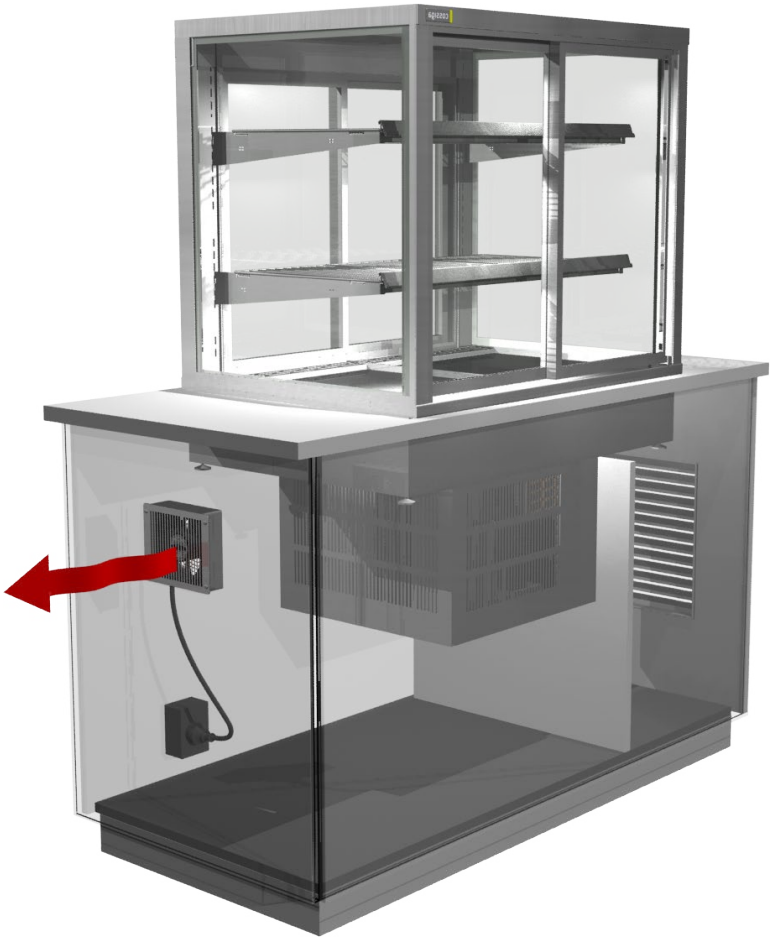

## EXTRACTION FAN

- Extract hot air from box joinery
- Fan and power cable supplied, screw fixed to joinery
- Electrical power cord 2000mm 3 pin 10 amp 1 phase socket required
- Fan 230v ~ 50Hz - 60Hz - 19 Watt in stainless steel case
- Cossiga part number X000611 Extraction Fan

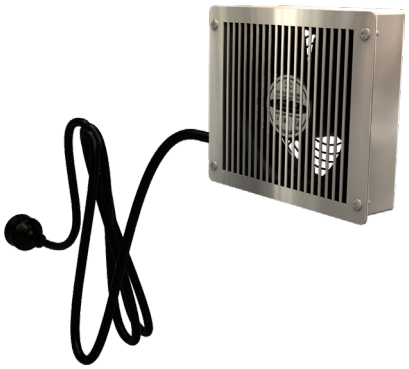

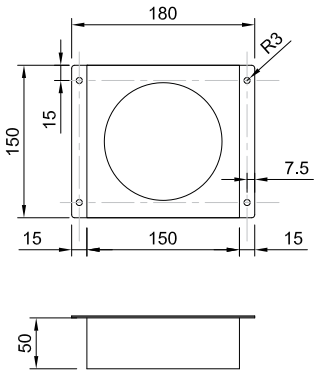


## VENTILATION GRILLE

- Stainless steel construction
- Hole cut out size 540 mm x 298 mm
- Square grille holes 10mm x 10mm
- Cossiga part number X000765 Ventilation Grill
  Screws not included

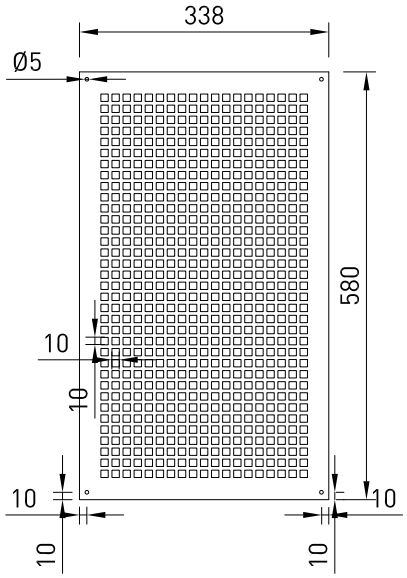

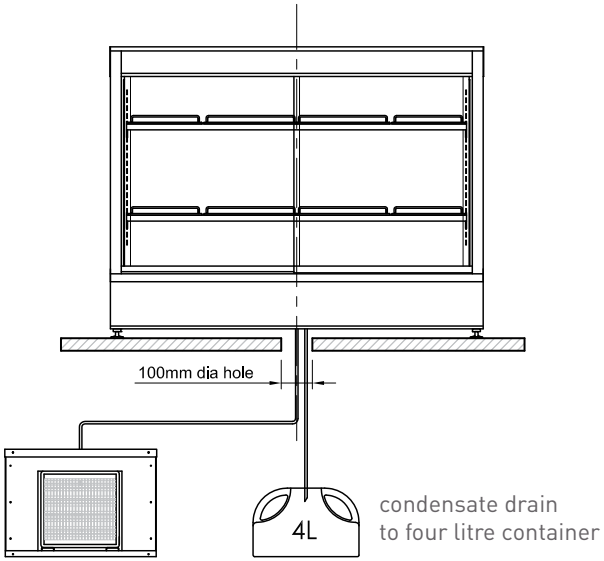


3/8" pipe max run 1500 mm

Vertical pipe runs are not recommended

Pipe runs over 150mm :
Expansion valve will need to be fitted
Correctly sized condensing unit fitted
Correct pipe size determined

## REMOTE COMPRESSOR INSTALLATION

## DRAINAGE RECOMMENDATIONS for high humidity locations

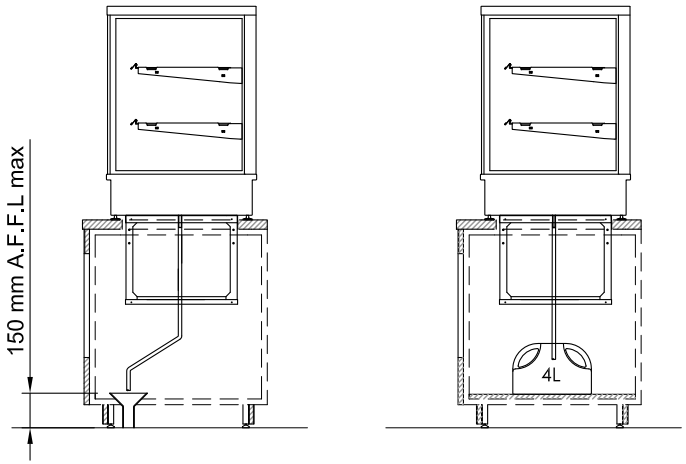


Plumbed

Receptacle

As standard units are self evaporating to a receptacle in the condenser unit. In areas of high humidity it is recommended by-passing the evaporator dish. A plastic hose can be attached to the end of the condensate drain and re-directed as shown.

### PLUMBED TUNDISH DRAINAGE

- Maximum 150 mm above finished floor level
- Drainage to building waste
- Building waste by client

### FREE STANDING RECIPIENT

- Receptacle placed under unit to receive condensate waste
- Dispose of waste water daily

TO BE CONSIDERED FOR HIGH HUMIDITY SITES WITH ACCESS TO DRAINAGE

# TOWER IN BENCH INSTALLATION

cossiga

THESE UNITS ARE HEAVY AND REQUIRE LIFTING INTO BENCH TOPS

PROTECT BENCHTOP

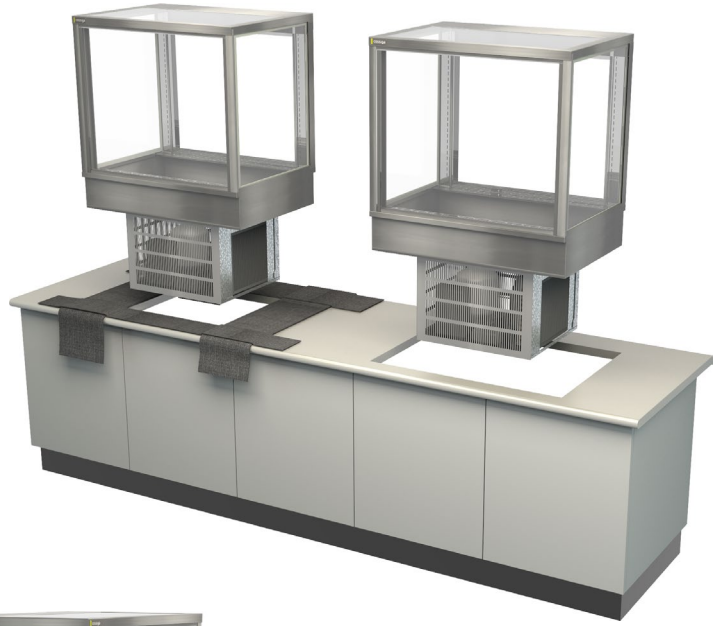

LIFT TO BENCH AND REST

REMOVE

To reduce weight remove
- All doors
- Shelving
- Base plates

PLAN AHEAD

- Have plenty of labour on hand
- Use a mechanical lifting device - optional
- Check bench top hole measurement
- Ensure enough clear depth in cabinet work
- Protect bench top with a mat or similar
- Pre-adjust unit feet if needed

All accepted local safety work wear and standards should be adhered to with a safety programme developed before undertaking of this kind of lifting work

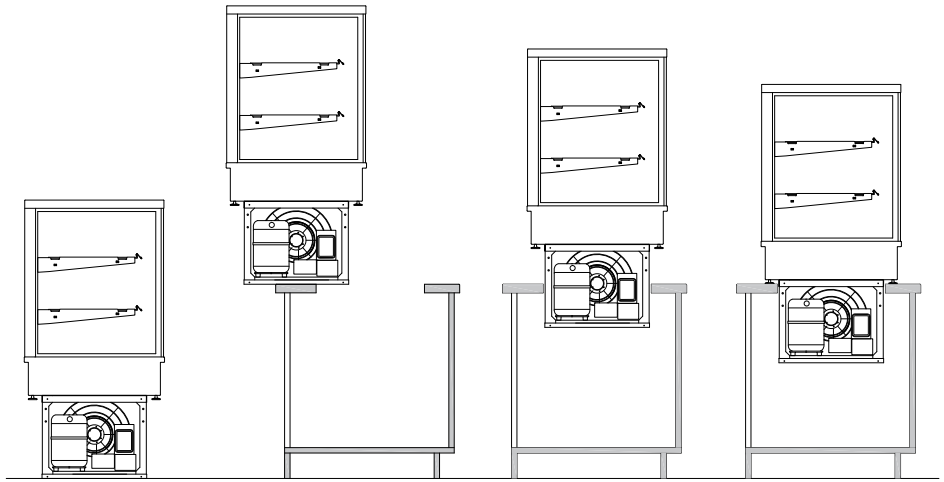



Download C.A.D models or contact us on COSSIGA.COM

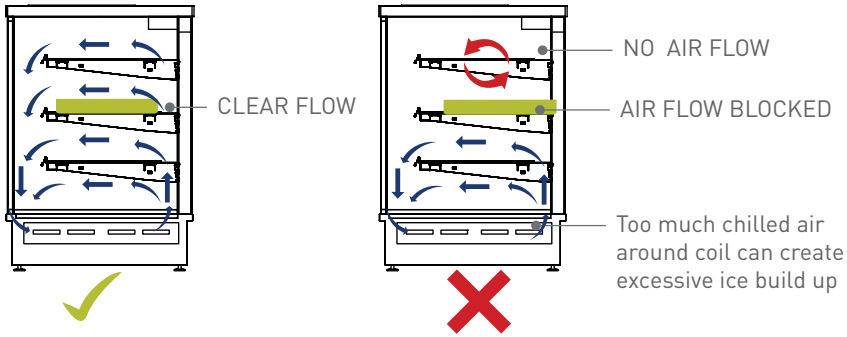


CORRECT AIRFLOW

IN CORRECT AIRFLOW

- Blocked air flow will retard operation on both HOT and COLD units
- Ensure trays or plates are not blocking air flow at rear

## Locations to avoid

- Close to shop front exterior
- In an outside location
- In direct sunlight
- In a high wind
- Near any source producing excessive heat
- Service units more frequently in dusty or polluted areas

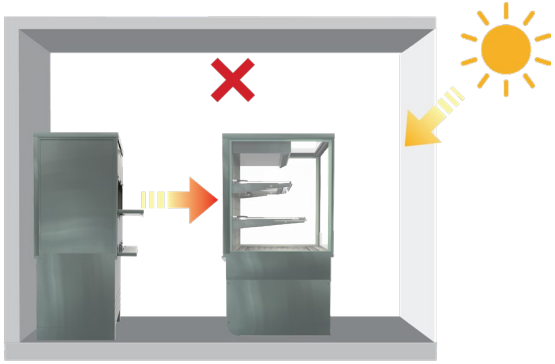

## Environmental conditions

Heat from other equipment and natural conditions, such as direct sunlight straight on units, can cause cooling to fail and overload compressor

cossiga

## Top Mounted Controller Panel

For against wall installations
Sold individually

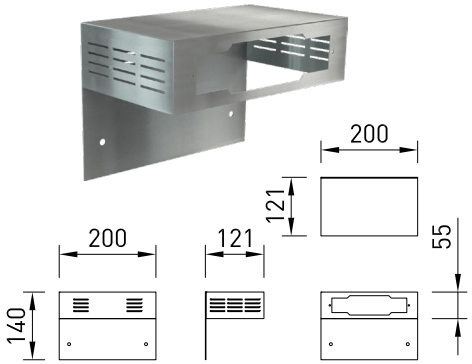

## Base Tray - Heated Units

Stainless Steel
For heated units
Sold in pairs

## Tong Holder

Stainless Steel
Drop into counter tray race
Sold individually

## Ventilation Grill

Stainless Steel
Sold individually

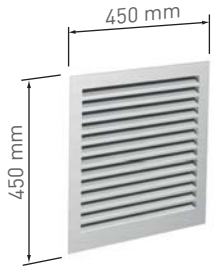


## Humidity Dish

Stainless Steel
Perforated lid is removable

## Bag Holder

Stainless Steel
Drop into counter tray race
Solid individually

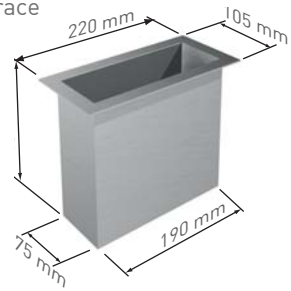




Download C.A.D models or contact us on COSSIGA.COM

# TOWER ACCESSORIES - L.E.D LIGHT BOX

cossiga

- Top mounting bracket
- 8mm Glass front light box with L.E.D. white back lit panel
- Custom PVC graphic slides into light box

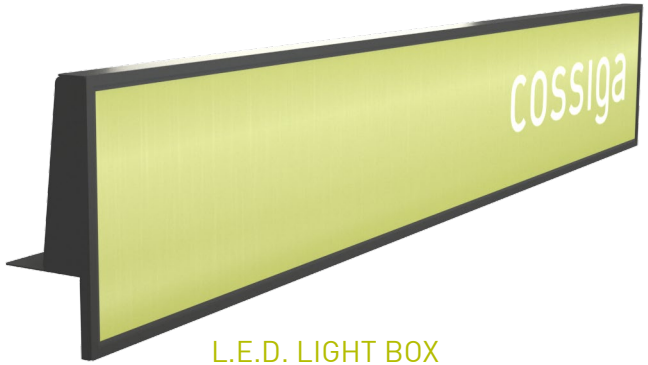


L.E.D. LIGHT BOX

**sold as accessory kit**

Custom graphic panel inserted into frame ( see sizes in table )

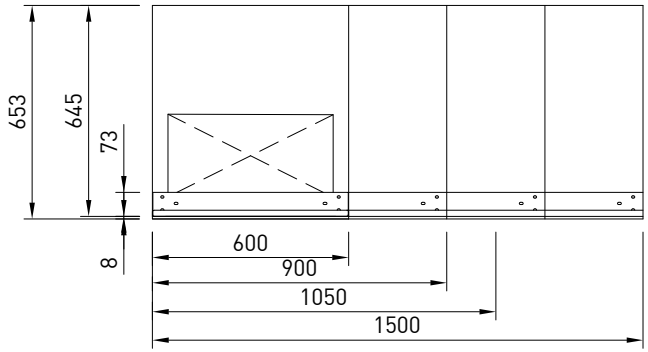


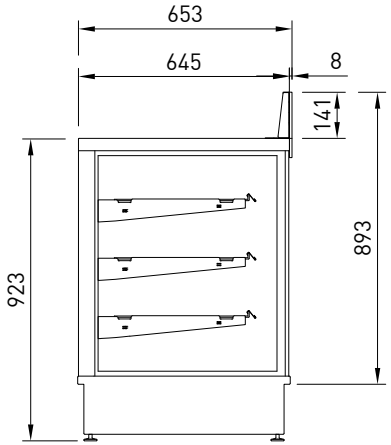


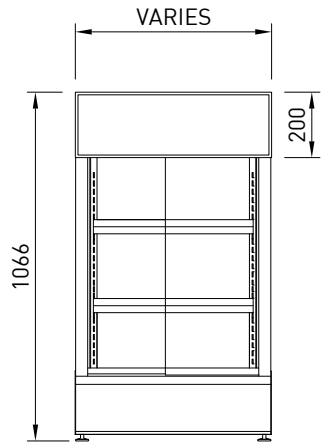


## LIGHT BOX SIZES

See Light box assembly document

| MODEL | LIGHT BOX SIZES | | |
|---|---|---|---|
| | OVER ALL LENGTH | HEIGHT MM | GRAPHIC PANEL SIZE W X H |
| STG6 | 600 | 200 | 595 X 189 |
| STG9 | 900 | 200 | 895 X 189 |
| STG12 | 1200 | 200 | 1195 X 189 |
| STG15 | 1500 | 200 | 1495 X 189 |



Download C.A.D models or contact us on COSSIGA.COM

# TOWER ACCESSORIES - DIGITAL SCREEN

cossiga

Fitted to top of unit with supplied brackets

- Top mounting bracket
- Digital display screen High Gloss picture
- Data input from USB

## DIGITAL SCREEN

**sold as accessory kit**

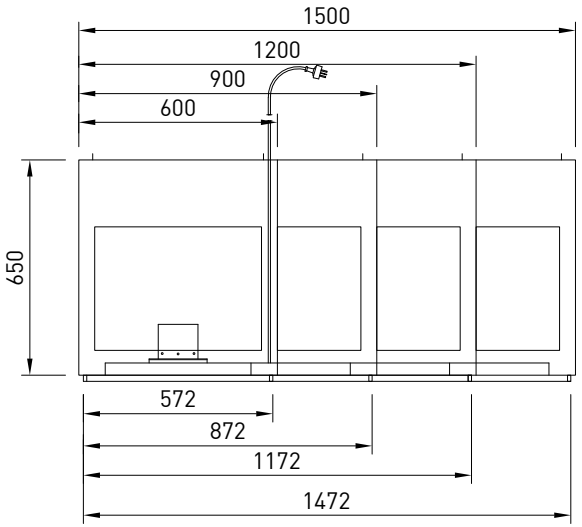


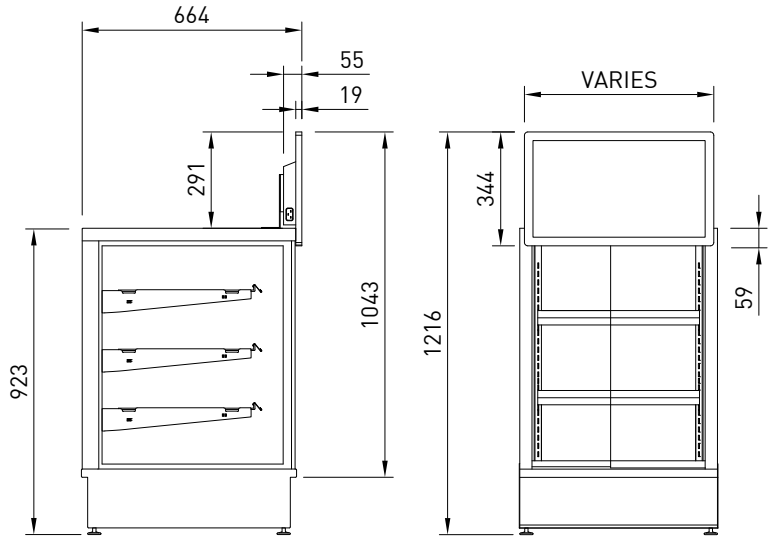


## DIGITAL SCREEN SIZES

| MODEL | SCREEN SIZES | |
|---|---|---|
| | OVER ALL LENGTH | HEIGHT MM |
| DTG6 | 572 | 344 |
| DTG9 | 872 | 344 |
| DTG12 | 1172 | 344 |
| DTG15 | 1472 | 344 |

See digital screen box assembly document



Download C.A.D models or contact us on COSSIGA.COM

Shelf with ticket strip attached

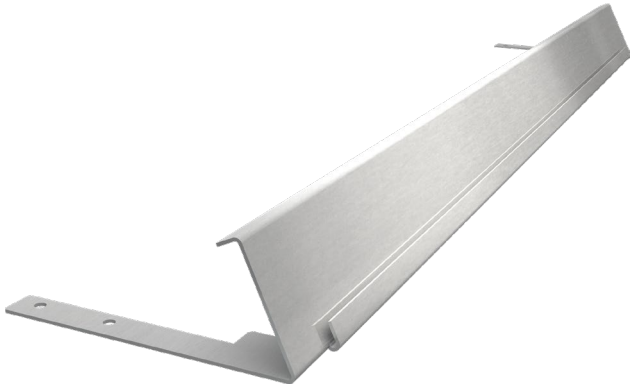

## Ticket Strip

Stainless Steel
Attaches to shelf frame

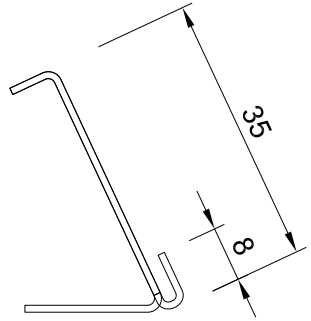


## End Profile

## Lengths

| CABINET LENGTH MM | TICKET STRIP LENGTH |
|---|---|
| 600 | 475 |
| 900 | 775 |
| 1200 | 1075 |
| 1500 | 1375 |

## Price Tabs

Stainless Steel
Write on with marker or adhesive tape
Measure 60mm x 30mm
Sold in packs of 20

## Glass Shelf Options

Standard wire racks are removed and replaced
with 6mm toughened glass panes

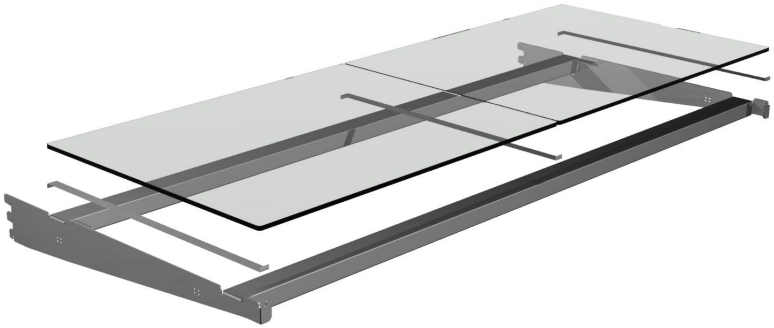

Maximum shelf load weight 15kg spread evenly

| MODEL | GLASS | WIDTH MM | DEPTH MM | PER SHELF PANES | SHELVES | TOTAL PANES |
|---|---|---|---|---|---|---|
| STGRF6 | 6MM TOUGHENED - POLISHED EDGES | 240 | 385 | 2 | 2 | 4 |
| STGRF9 | 6MM TOUGHENED - POLISHED EDGES | 390 | 385 | 2 | 2 | 4 |
| STGRF12 | 6MM TOUGHENED - POLISHED EDGES | 540 | 385 | 2 | 2 | 4 |
| STGRF15 | 6MM TOUGHENED - POLISHED EDGES | 690 | 385 | 2 | 2 | 4 |
| STGAB6 | 6MM TOUGHENED - POLISHED EDGES | 240 | 385 | 2 | 3 | 6 |
| STGAB9 | 6MM TOUGHENED - POLISHED EDGES | 390 | 385 | 2 | 3 | 6 |
| STGAB12 | 6MM TOUGHENED - POLISHED EDGES | 540 | 385 | 2 | 3 | 6 |

Support bracket

## Mirror film

- Applied to the inside glass rear doors
- Suitable for heated and chilled units

ADDS DEPTH TO YOUR DISPLAYS

Mirror film adhered to inside of rear door glass

BLOCKS WORK AREAS BEHIND UNITS

## Pie Trays

- Stainless Steel Construction
- Placed on shelves for heated food items

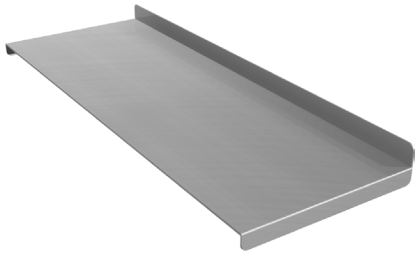

| | | | PIE TRAYS | | | | |
|---|---|---|---|---|---|---|---|
| MODEL | CODE | QUANTITY | 1ST SHELF DEPTH | 2ND SHELF DEPTH | 3RD SHELF DEPTH | TOTAL | TRAY WIDTH |
| STGHT6 | AA16015 | 4 Per Shelf | 400MM | 365MM | 400MM | 12 Trays | 120MM |
| STGHT9 | AA16016 | 6 Per Shelf | 400MM | 400MM | 400MM | 18 Trays | 130MM |
| STGHT12 | AA16017 | 9 Per Shelf | 400MM | 400MM | 400MM | 27 Trays | 120MM |

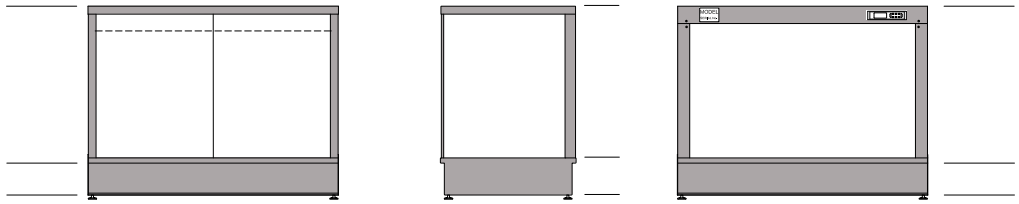

## COUNTER TOP MODEL -

all exterior visible areas covered

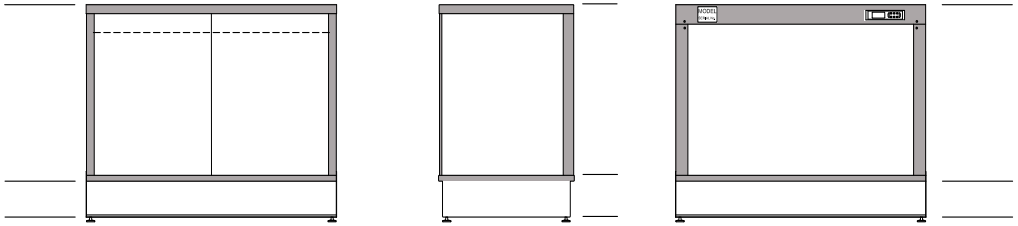

all exterior top visible areas covered

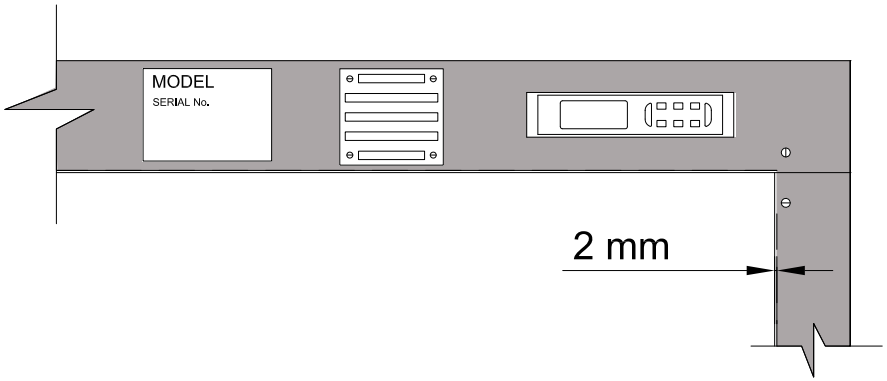


2mm gap left around rear frame

Rear of units cut around serial number plate, exhaust fan and controller