TOWER TOWER COUNTER SERIES HEATED

cossiga

HT

STGHT6 STGHT6-SD
STGHT9 STGHT6-SD
STGHT12 STGHT12-SD

- Deck forced heating
- Single glazed
- Sliding rear doors
- Solid front or sliding front doors
- Three adjustable shelves - flat or angled
- Ticket strips on shelves and base
- Under shelf and canopy LED lights

Solid glass front - optional

STGHT6 hinged rear door

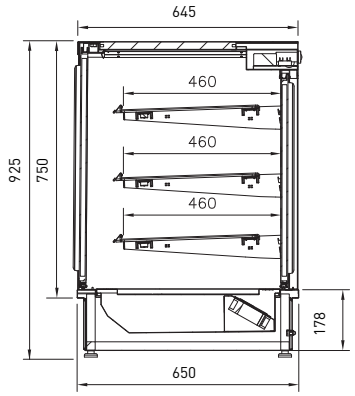

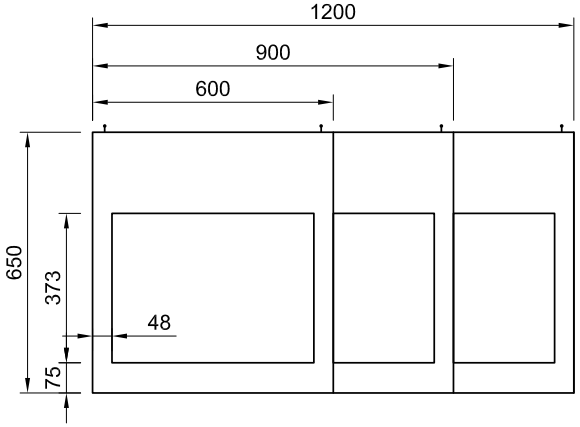

CABINET DIMENSIONS & SPECIFICATIONS

Heated 68°C-78°C

MODEL	CABINET					SHELVING		BASE TRAY	TOTAL FOOD	DISPLAY M^2	INTERNAL VOLUME M^3	POWER 50 Hz		CONNECTION ELECTRICAL POWER CORD 2200MM		VOLTAGE	PACKED FOR SHIPPING			
	LENGTH [MM]	DEPTH [MM]	HEIGHT [MM]	WEIGHT [KG]	CUT OUTS	NO.	SIZE W X D	SIZE W X D	100MM UNITS			KW 230V	AMPS	NZ/AUS	UK		LENGTH [MM]	DEPTH [MM]	HEIGHT [MM]	WEIGHT [KG]
STGHT6-SD STGHT6	600	650	925	88	615x620	3+BASE	490 x 440	540 x 415	55	0.80	0.31	1.24	5.4	10 AMP 3 PIN PLUG	13 AMP 3 PIN PLUG	220~240V	700	730	1100	95
STGHT9-SD STGHT9	900	650	925	110	915x620	3+BASE	790 x 440	840 x 415	84	1.27	0.34	1.71	7.4	10 AMP 3 PIN PLUG	13 AMP 3 PIN PLUG	220~240V	1000	730	1100	117
STGHT12-SD STGHT12	1200	650	925	126	1215x620	3+BASE	1090 x 440	1140x 415	121	1.75	0.46	2.21	9.6	15 AMP 3 PIN PLUG	15 AMP 3 PIN PLUG	220~240V	1300	730	1100	133

Maximum shelf load weight 15kg spread evenly

SLIDING FRONT DOORS and rear glass sliding doors STGHT-SD
SOLID FRONT and rear glass sliding doors STGHT

 Date Modified: 31/07/25 Check website for latest version

Download C.A.D models or contact us on COSSIGA.COM

TOWER PLACED IN BENCH DETAIL

cossiga

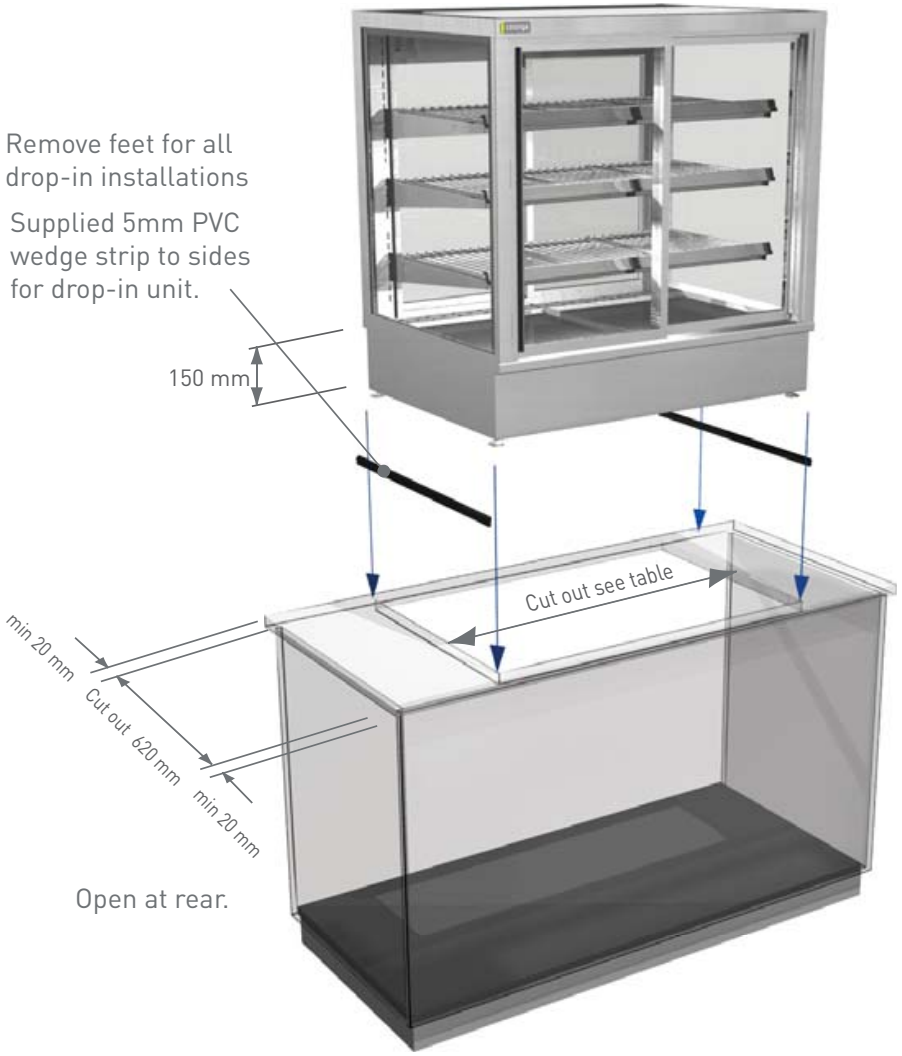

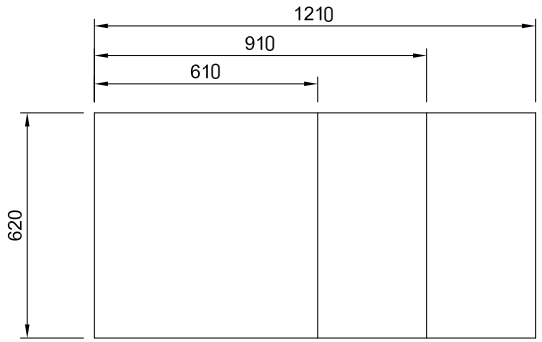

benchtop cut out sizes

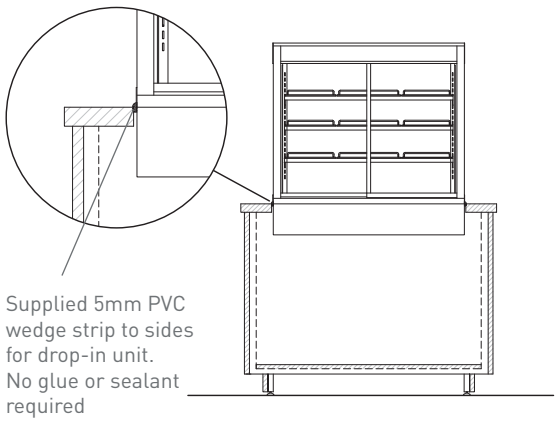

Date Modified: 31/07/25 Check website for latest version

Download C.A.D models or contact us on COSSIGA.COM

TOWER IN BENCH INSTALLATION

cossiga

THESE UNITS ARE HEAVY AND REQUIRE LIFTING INTO BENCH TOPS

PROTECT BENCHTOP

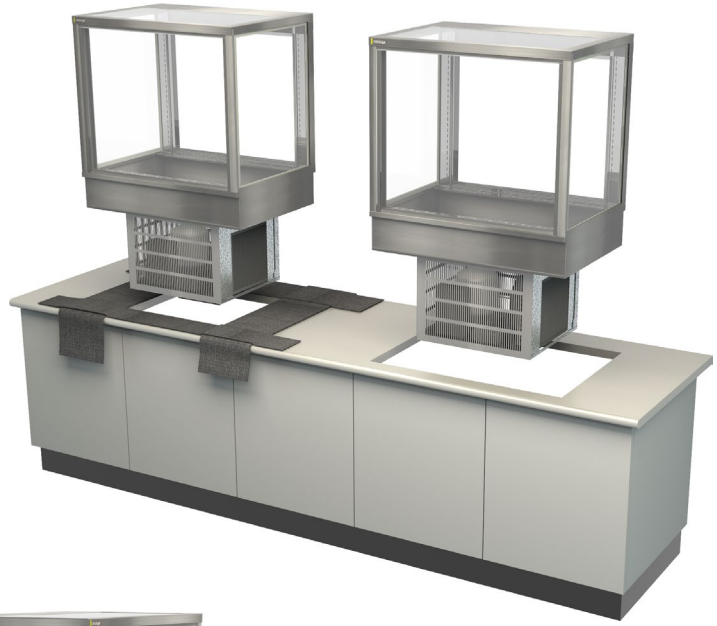

LIFT TO BENCH AND REST

REMOVE

To reduce weight remove
- All doors
- Shelving
- Base plates

PLAN AHEAD

- Have plenty of labour on hand
- Use a mechanical lifting device - optional
- Check bench top hole measurement
- Ensure enough clear depth in cabinet work
- Protect bench top with a mat or similar
- Pre-adjust unit feet if needed

All accepted local safety work wear and standards should be adhered to with a safety programme developed before undertaking of this kind of lifting work

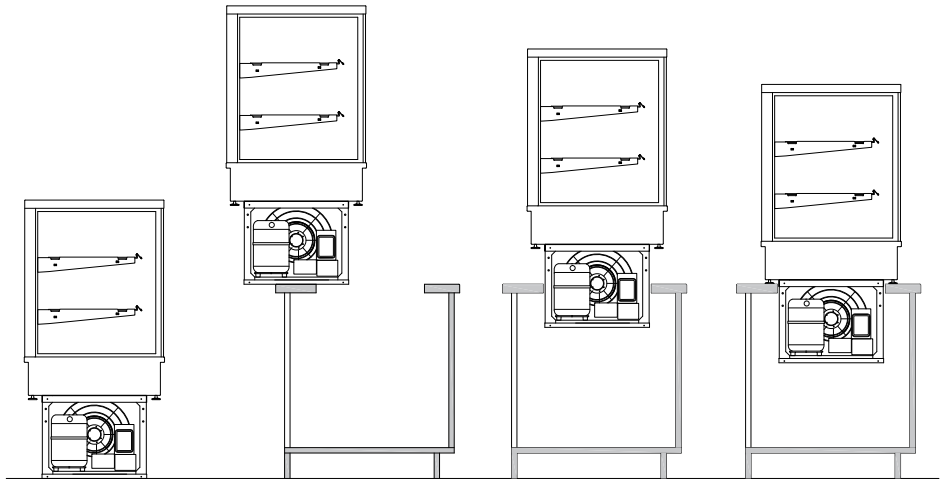

Date Modified: 31/07/25 Check website for latest version

Download C.A.D models or contact us on COSSIGA.COM

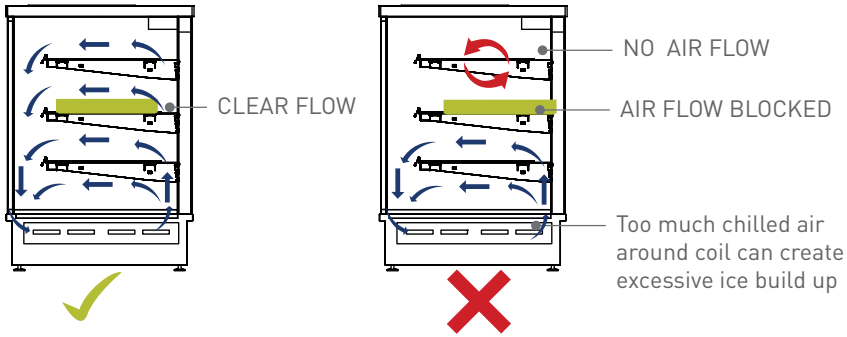

CORRECT AIRFLOW

IN CORRECT AIRFLOW

- Blocked air flow will retard operation on both HOT and COLD units
- Ensure trays or plates are not blocking air flow at rear

Locations to avoid

- Close to shop front exterior
- In an outside location
- In direct sunlight
- In a high wind
- Near any source producing excessive heat
- Service units more frequently in dusty or polluted areas

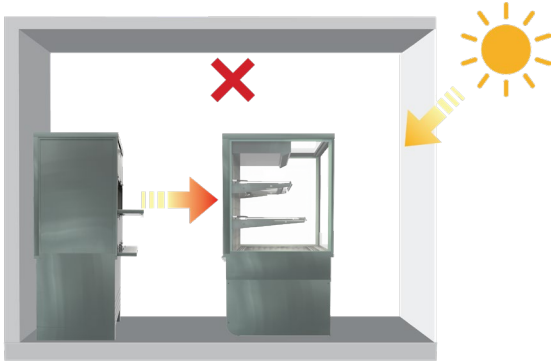

Environmental conditions

Heat from other equipment and natural conditions, such as direct sunlight straight on units, can cause cooling to fail and overload compressor

cossiga

Top Mounted Controller Panel

For against wall installations
Sold individually

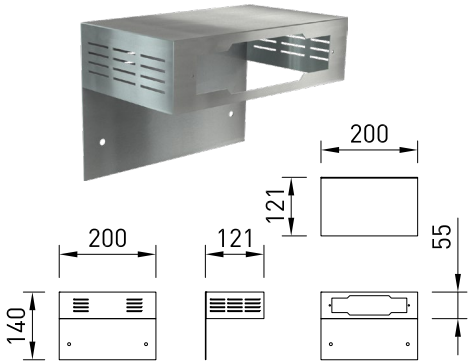

Base Tray - Heated Units

Stainless Steel
For heated units
Sold in pairs

Tong Holder

Stainless Steel
Drop into counter tray race
Sold individually

Ventilation Grill

Stainless Steel
Sold individually

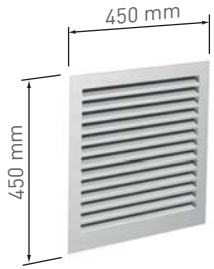

Humidity Dish

Stainless Steel
Perforated lid is removable

Bag Holder

Stainless Steel
Drop into counter tray race
Solid individually

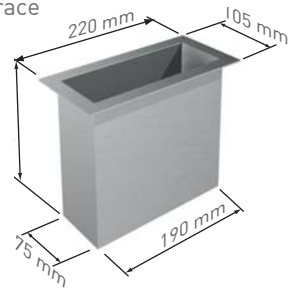

Download C.A.D models or contact us on COSSIGA.COM

TOWER TICKET STRIP

cossiga

Shelf with ticket strip attached

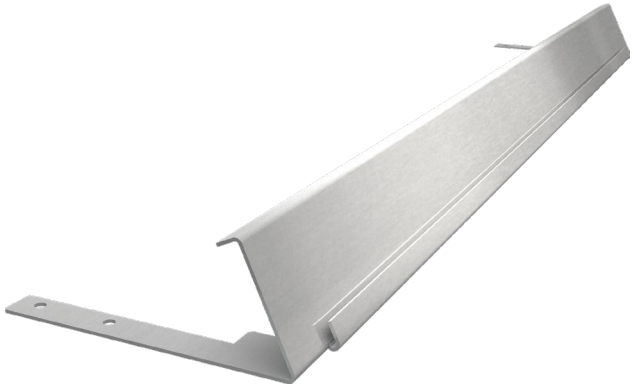

Ticket Strip

Stainless Steel
Attaches to shelf frame

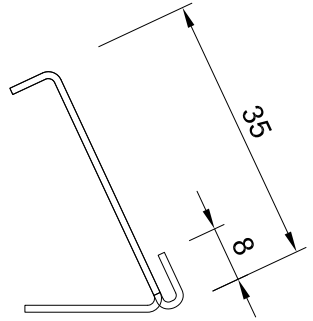

End Profile

Lengths

CABINET LENGTH MM	TICKET STRIP LENGTH
600	475
900	775
1200	1075
1500	1375

Price Tabs

Stainless Steel
Write on with marker or adhesive tape
Measure 60mm x 30mm
Sold in packs of 20

Date Modified: 31/07/25 Check website for latest version

Download C.A.D models or contact us on COSSIGA.COM

Gastronorm Pan Kit

Allows you to merchandise multiple hot food choices in one cabinet

Expand the use of your heated cabinet with this Gastronorm Pan Kit with an angled frame that accepts 1/2 Gastro pan 65 mm (supplied)
Holds fried foods and bulky products like chicken, lasagne, toppers, roast potatoes, etc.

Remove bottom shelf for optimum viewing

HT6 - 2 Pans
HT9 - 3 Pans
HT12 - 4 Pans

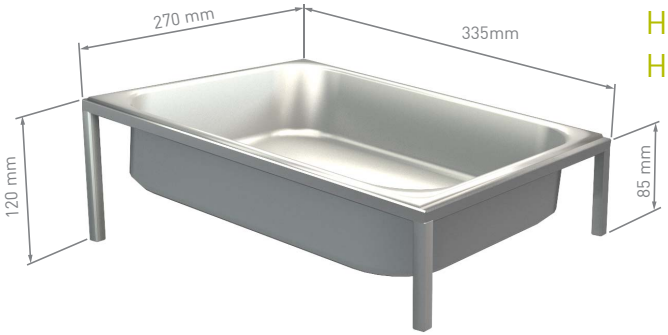

Stainless steel construction angled display view

Mirror film

- Applied to the inside glass rear doors
- Suitable for heated and chilled units

ADDS DEPTH TO YOUR DISPLAYS

Mirror film adhered to inside of rear door glass

BLOCKS WORK AREAS BEHIND UNITS

Pie Trays

- Stainless Steel Construction
- Placed on shelves for heated food items

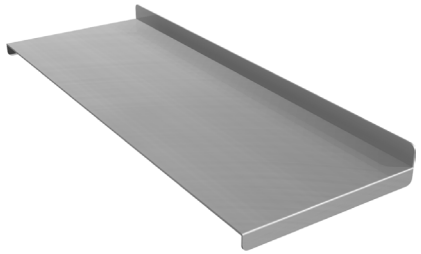

1 Rack + 1/2 Pan

One rack with half size pan

			PIE TRAYS				
MODEL	CODE	QUANTITY	1ST SHELF DEPTH	2ND SHELF DEPTH	3RD SHELF DEPTH	TOTAL	TRAY WIDTH
STGHT6	AA16015	4 Per Shelf	400MM	400MM	400MM	12 Trays	120MM
STGHT9	AA16016	6 Per Shelf	400MM	400MM	400MM	18 Trays	130MM
STGHT12	AA16017	9 Per Shelf	400MM	400MM	400MM	27 Trays	120MM

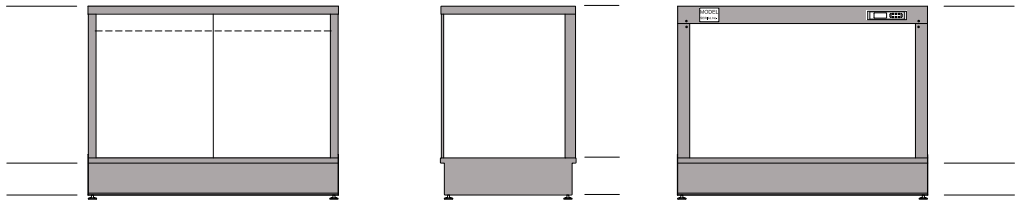

COUNTER TOP MODEL

all exterior visible areas covered

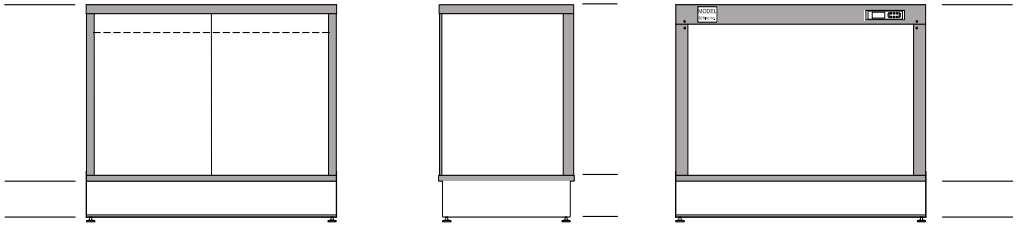

all exterior top visible areas covered

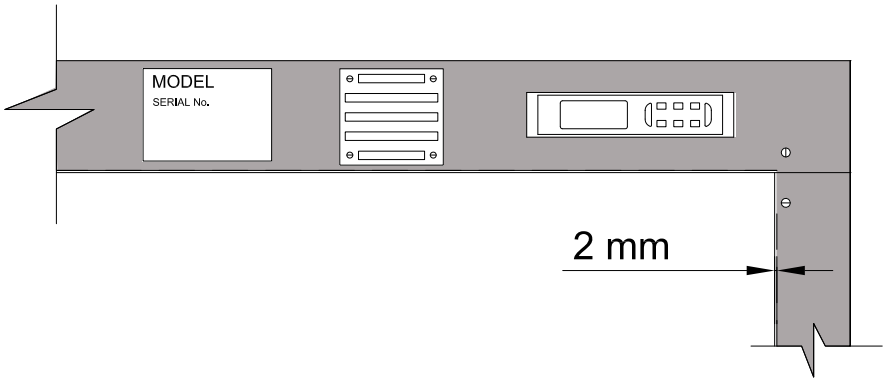

2mm gap left around rear frame

Rear of units cut around serial number plate, exhaust fan and controller