PREMIERPLUS0835

PREMIERPLUS SERIES
BENCHTOP VACUUM PACKER

The NEW Premier Plus series of benchtop vacuum packaging machines offer state of the art, innovative, robust vacuum sealing technology with new sleek design.

STANDARD FEATURES

- 3 Adjustable program settings
- Simple control panel
- Settings can be saved ensuring consistent results every time
- Secured access. Different access levels with authorisation codes
- Liquid Control (Set and forget) - sensor to detect the boiling point of liquid products. Developed to pack meat products and liquids such as soups, sauces and marinades. Conserves the quality and weight of product.
- Inclined insert plate for packing liquid products
- Skip to the next phase in the vacuum cycle using right arrow button
- Service menu - Store Operation hours / process cycles / pump cleaning
- Stainless steel housing & deep-drawn vacuum chamber for optimal hygiene
- Removable double seal sealing bar
- Supplied with two insert plates for a faster cycle and good positioning
- Vacuum - Optimal final vacuum 99.80% (2 mbar)
- Soft-air - This enables the optimal vacuum of sharp and sensitive products without damaging the product or vacuum bag.
- Sensor Control - Set percentage pressure for vacuum & gas functions for accurate & constant packaging results
- Stop button for partial / full cycle interruption
- Pump Cleaning program button with automatic warning message
- External Vacuum function
- Service kit for user maintenance
- 345mm sealing bar
- Red Meat program - short injections of air to prevent discoloration of meat during sealing phase

OPTIONAL FEATURES

- Trolleys with 3 shelves and lockable castors
- CUT-OFF Seal Bar

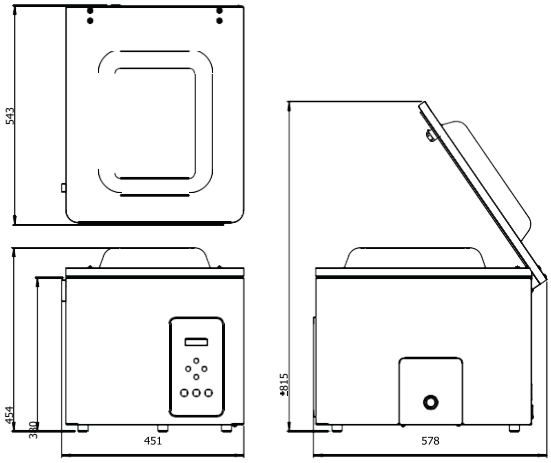

DIMENSIONS

External Dimensions: 451W x 543D x 454H mm
Chamber: 350W x 370D x 150H mm
Sealing Bar: 345mm
Weight: 36kg

TECHNICAL DATA

Power Supply: 230V - 50Hz - 10A (lead with plug supplied)
Power consumption: 0.5kW
Capacity pump: 8 m³/h
Machine cycle: 19-50 sec

SPECIFICATIONS ARE SUBJECT TO CHANGE WITHOUT NOTICE.

Busch vacuum pumps, world leaders in vacuum pump technology.

Three Years Parts & Two Years Labour Warranty

www.comcater.com.au
contactus@comcater.com.au