POLAR2-50-ACS
VACUUM PACKAGING MACHINE

The robust, stainless steel Purevac Polar 2-50-ACS vacuum packaging machine is standard equipped with a Busch vacuum pump.

STANDARD FEATURES

- Standard with 2 seal bars (front-back): 2 x 620 mm
- Standard double seal (two wires), optional without extra costs: Cut-off or Wide seal (10 mm)
- Silicone holders easily removable for cleaning and maintenance purposes
- Pump capacity: 100 m3 /h Busch vacuum pump
- Pump maintenance and cleaning program
- Machine cycle: 15-40 sec
- Soft Air to protect the product and vacuum bag
- Sensor control
- Flat work plate
- Advanced Control System (ACS) offering 20 personalised programs including:
  - Liquid Control (set and forget)
  - Marinating
  - Tenderising
  - Red Meat
  - Sequential vacuum
  - Jar sealing
- Insert plates for a faster cycle and product adjustment
- Stainless steel exterior
- IP-65 Rating
- Service kit for standard maintenance included

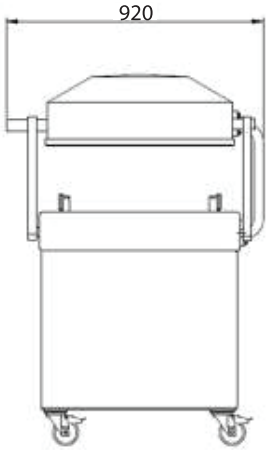

OPTIONAL

- 1-2 Cut off / Bi-active seal
- Gas flush (incl. pressed air connection)
- Preparation for external pump
- Heating element for vacuum valve

ACCESSORIES

- Zebra ZD410 thermal label printer (only in combination with ACS)
- Inclined insert plate (for vacuum packing liquids and powders)

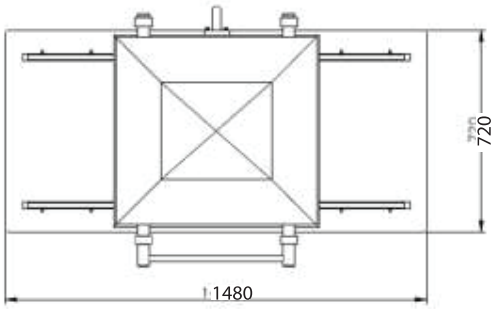

DIMENSIONS

External dimensions: 1480W x 920D x 1325H mm

Chamber (usable space): 500W x 620D x 240H mm

TECHNICAL DATA

Voltage (Hz): 3NAC 400V 50Hz

Pump Capacity (m^3/h): 100

Power (kW): 2.6

Weight: 345kg

RCM Approved:

SPECIFICATIONS ARE SUBJECT TO CHANGE WITHOUT NOTICE.

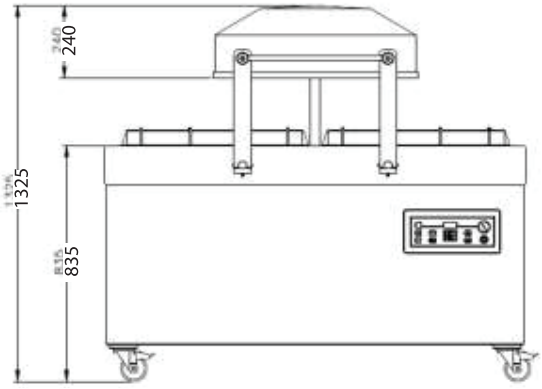

www.comcater.com.au contactus@comcater.com.au