POLAR2-40-ACS

VACUUM PACKAGING MACHINE

The robust, stainless steel POLAR2-40-ACS vacuum packaging machine is standard equipped with a Busch vacuum pump

STANDARD FEATURES

- Pump capacity: 63 m3/h Busch vacuum pump
- Standard with 2 seal bars (front-back): 2 x 620 mm
- Standard double seal (two wires)
- Silicone holders easily removable for cleaning and maintenance purposes
- Pump maintenance and cleaning program
- Machine cycle: 15-40 sec
- Soft Air to protect the product and vacuum bag
- Sensor control
- Flat work plate
- Insert plates included for a faster cycle and product adjustment
- Advanced Control System (ACS) offering 20 personalised programs including:
  - Liquid Control (set and forget)
  - Marinating
  - Tenderising
  - Red meat
  - Sequential Vacuum
  - Jar Sealing
- Stainless steel exterior
- IP-65 Rating
- Service kit for standard maintenance included

OPTIONAL FEATURES

- 1-2 Cut-off/Bi-active seal
- Cut off seal
- Wide seal (10mm)
- Gas flush (incl. pressed air connection)
- Preparation for external pump
- Heating element for vacuum valve

ACCESSORIES

- Zebra ZD410 thermal label printer (only in combination with ACS models)
- Inclined insert plate (for vacuum packing liquids and powders)

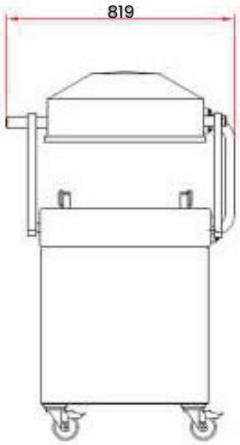

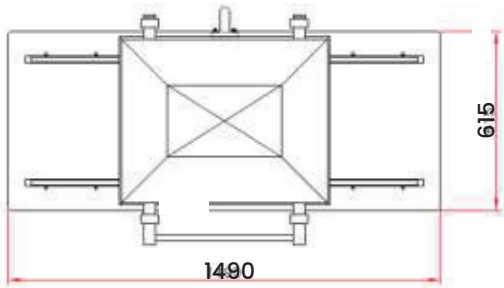

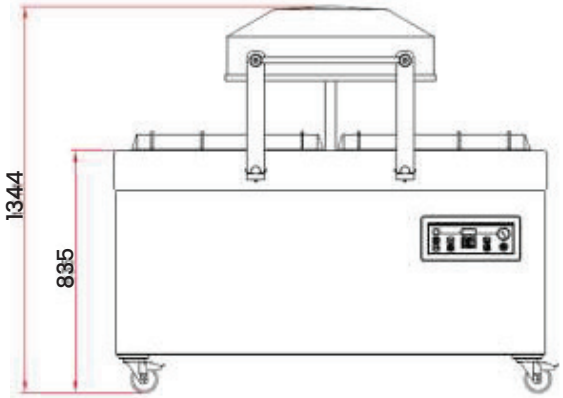

DIMENSIONS

External Dimension: 1490W x 819D x 1344H mm

Chamber (usable space): 400W x 620D x 240H mm

TECHNICAL DATA

Voltage (Hz): 3NAC 400V 50Hz

Pump Capacity (m^3/h): 63

Power (kW): 2.1

Weight: 310kg

RCM Approved:

SPECIFICATIONS ARE SUBJECT TO CHANGE WITHOUT NOTICE.

www.comcater.com.au contactus@comcater.com.au

MA005A Purevac POLAR2-40-ACS Specification Sheet Issue 002 | Issue Date: 26/05/2023