LSCM LINEAR SERIES CERAMIC HEATED GLASS

cossiga

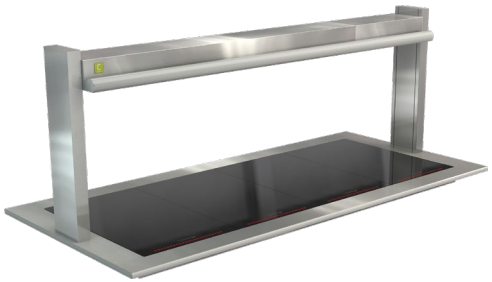

CM

LSCM2
LSCM3
LSCM4
LSCM5
LSCM6

- Ceramic Heated Glass
- Overhead Ceramic Heaters and LED Lighting
- Digital thermostatic controller
- Heat indicating LED lights

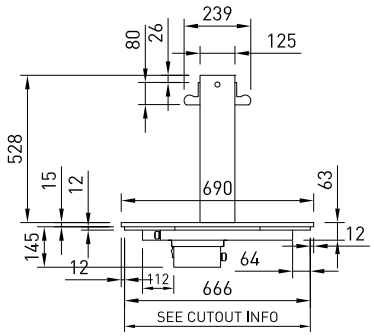

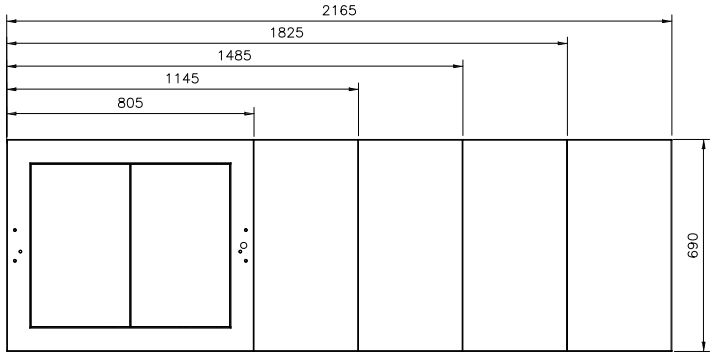

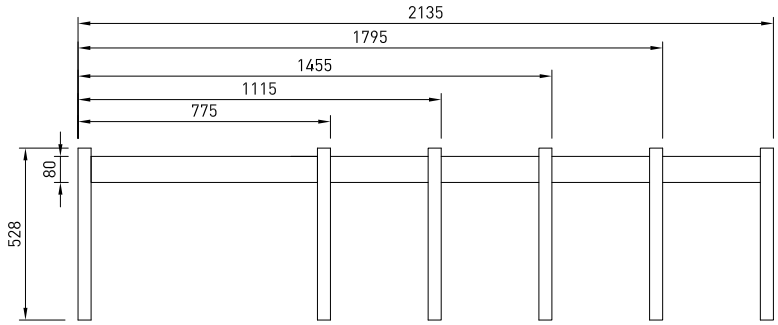

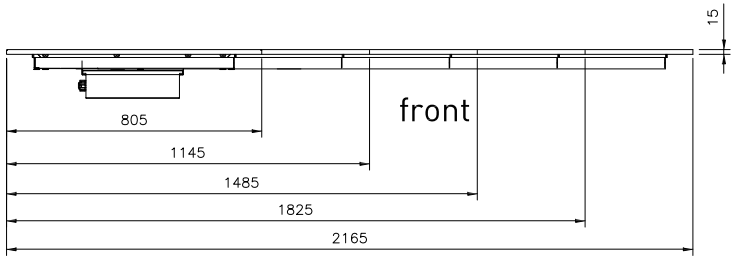

CABINET DIMENSIONS & SPECIFICATIONS

MODEL	CABINET			WEIGHT	BENCH TOP CUT OUT HOLE SIZE	TEMP RANGE	DISPLAY AREA	FREQUENCY	CURRENT WITH OVERHEAD HEATING & LEDS	POWER WITH OVERHEAD HEATING & LEDS	CONNECTION ELECTRICAL POWER CORD 3000MM	VOLTAGE	PACKED FOR SHIPPING			
	LENGTH [MM]	DEPTH [MM]	HEIGHT [MM]	KG		DEG C	M2		AMPS	KW 230V	NZ/AUS/UK		LENGTH [MM]	DEPTH [MM]	HEIGHT [MM]	WEIGHT [KG]
LSCM2	805	690	555	65	775x672	75-95	0.33	50 Hz	7.9	1.9	10 AMP 3 PIN PLUG (UK 13 AMP)	220-240V	910	770	410	76
LSCM3	1145	690	555	65	1115x672	75-95	0.51	50 Hz	11.7	2.691	15 AMP LEAD ONLY	220-240V	1250	770	410	88
LSCM4	1485	690	555	85	1455x672	75-95	0.68	50 Hz	15.7	3.611	20 AMP LEAD ONLY	220-240V	1590	770	410	107
LSCM5	1825	690	555	97	1795x672	75-95	0.86	50 Hz	19.6	4.508	20 AMP LEAD ONLY	220-240V	1930	770	410	128
LSCM6	2165	690	555	109	2135x672	75-95	1.04	50 Hz	23.5	5.405	30 AMP LEAD ONLY	220-240V	2270	770	410	140

 Date Modified: 18/06/26 Check website for latest version

AutoCAD Revit

Download or contact us on COSSIGA.COM

CM LSSC1

- Single ceramic heated glass
- Digital thermostatic controller
- Heat indicating LED lights on panel
- Flush mount drop in module

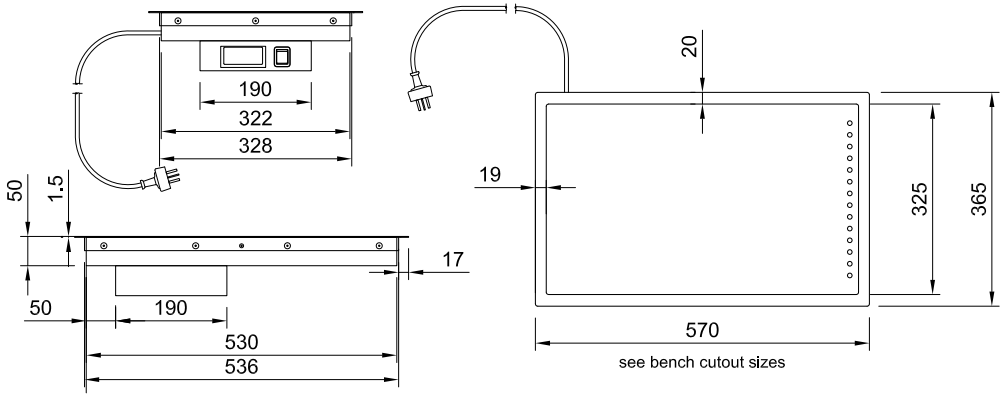

MODEL	CABINET			WEIGHT	BENCH TOP CUT OUT HOLE SIZE	TEMP RANGE	DISPLAY AREA	FREQUENCY	OPERATING CURRENT	POWER	CONNECTION ELECTRICAL POWER CORD 3000MM	VOLTAGE	PACKED FOR SHIPPING			
	LENGTH [MM]	DEPTH [MM]	HEIGHT [MM]	KG		DEG C	M2		AMPS	KW 230V	NZ/AUS/UK		LENGTH [MM]	DEPTH [MM]	HEIGHT [MM]	WEIGHT [KG]
LSSC1	570	365	1.5	18	545 x 338	75-95		50 Hz	2.52	0.579	10 AMP 3 PIN PLUG	220-240V	680	420	165	20

cossiga

ELECTRICAL POWER

Electrical power cord 3000mm
1 phase connection required.

Unit can be hard wired to isolation switch or fitted with suitable heavy duty plug such as PDL 56 series or Commando style plug.

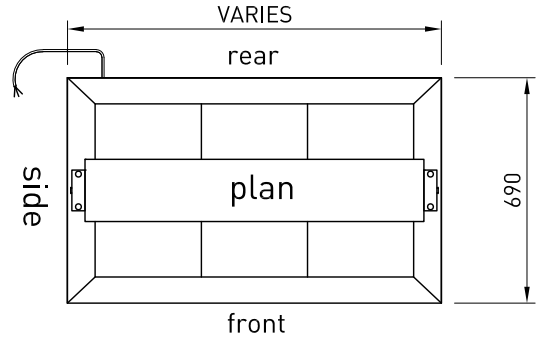

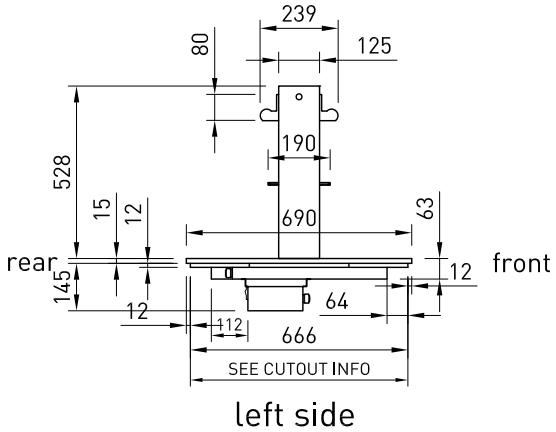

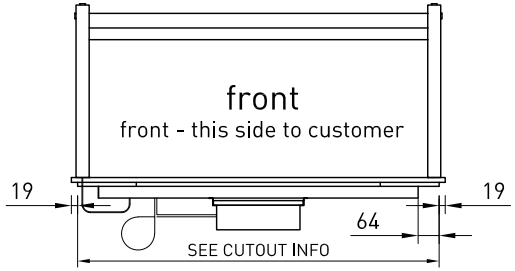

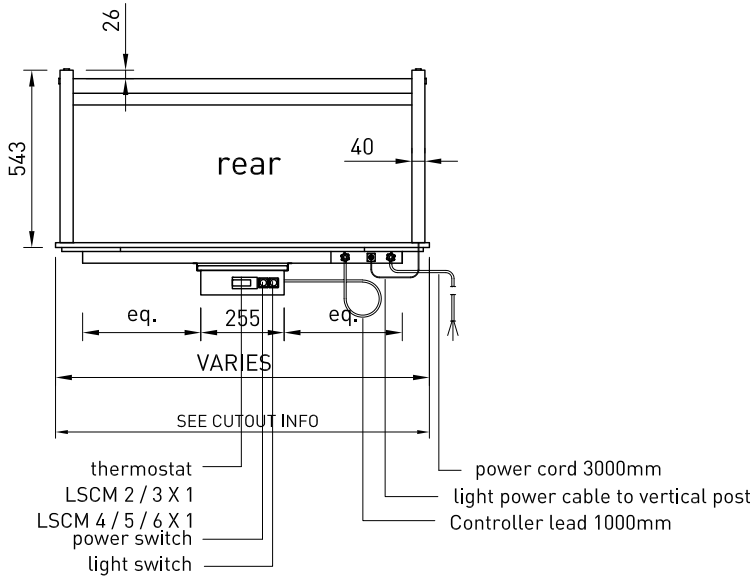

PANEL CONTROLLERS

MODEL	NUMBER OF PANELS	NUMBER OF CONTROLLERS	GROUP OF PANELS CONTROLLED
LSCM2	2	1	CONTROLLER 1 - 2
LSCM3	3	1	CONTROLLER 1 - 3
LSCM4	4	2	CONTROLLER 1 - 2 CONTROLLER 2 - 2
LSCM5	5	2	CONTROLLER 1 - 2 CONTROLLER 2 - 3
LSCM6	6	2	CONTROLLER 1 - 3 CONTROLLER 2 - 3

Panel Controllers
LSCM 2/3 X1
LSCM 4/5/6 X 2

Download C.A.D models or contact us on COSSIGA.COM

GLASS CANOPY OPTIONS

ASSEMBLY REQUIRED

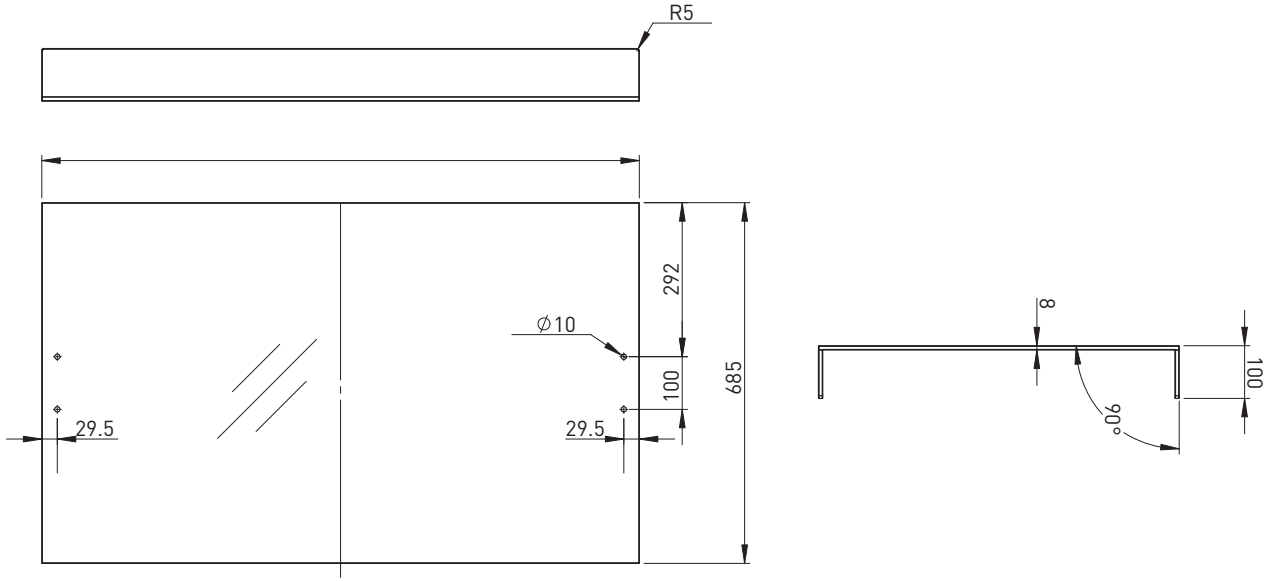

GLFT Flat Top

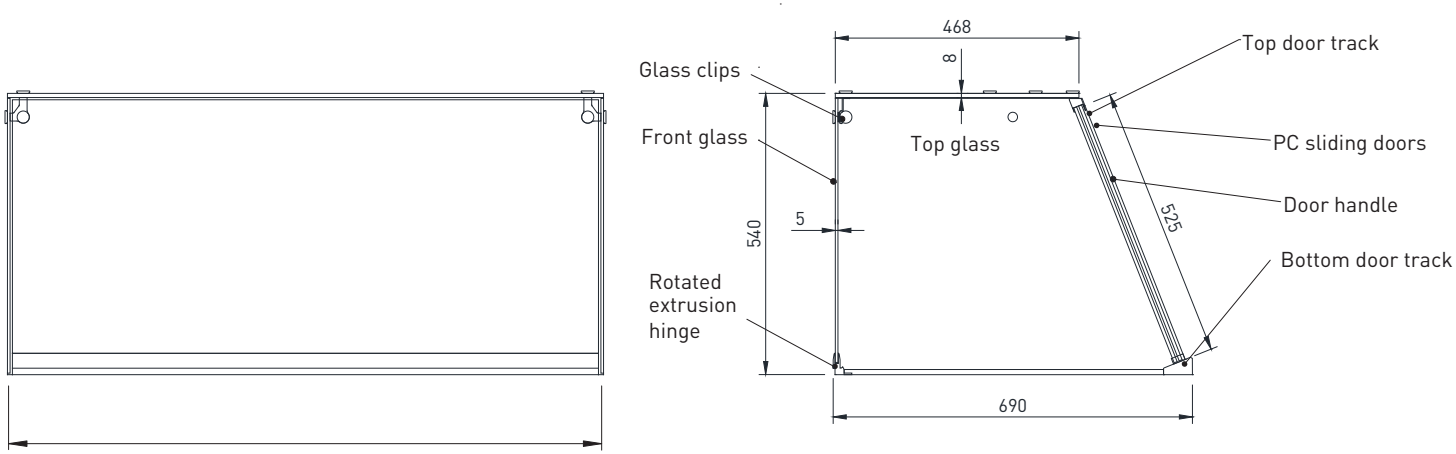

GLFS Full Square Glass

Download C.A.D models or contact us on COSSIGA.COM

FLUSH BENCH TOP DETAIL

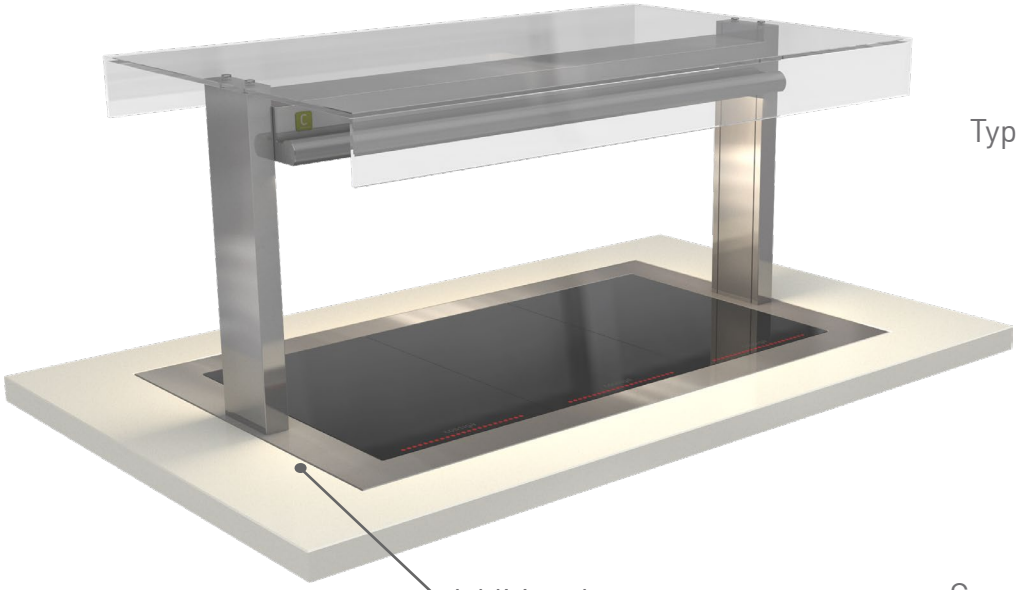

Additional support may be required under bench ie. stainless steel hollow section to frame

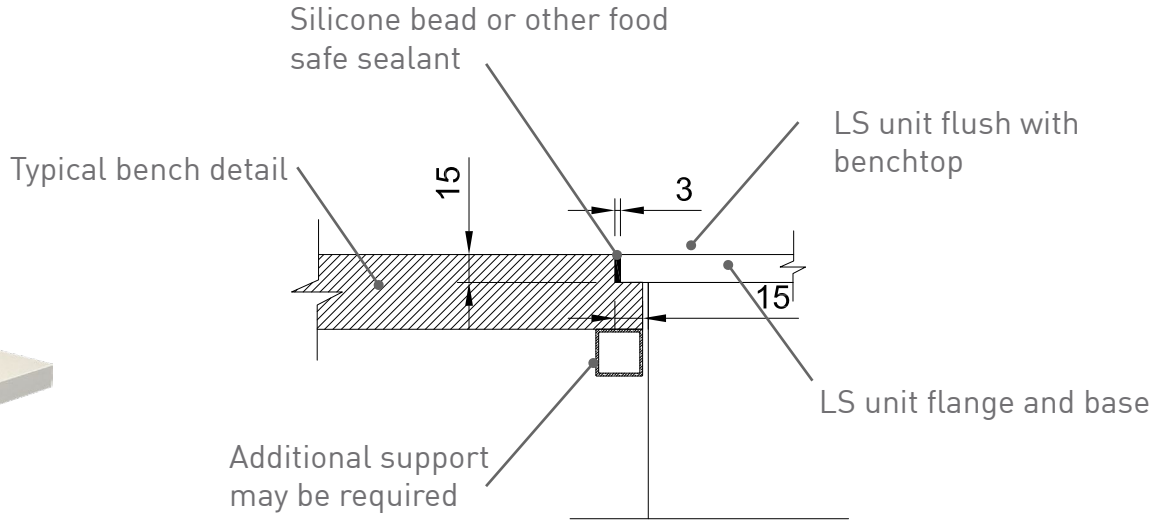

Counter top joinery must be of sufficient structural capacity to take the weight of the LS unit when the flange detail has been made.

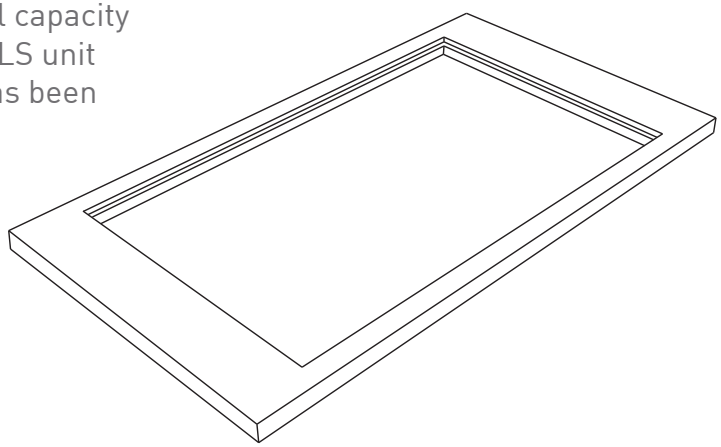

LSCM LINEAR SERIES CONTROLLER JOINERY PANEL

cossiga

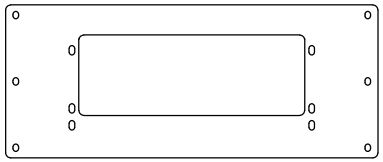

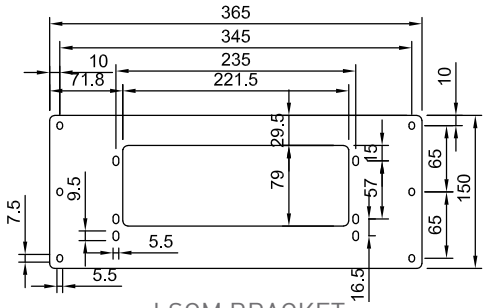

LSCM BRACKET

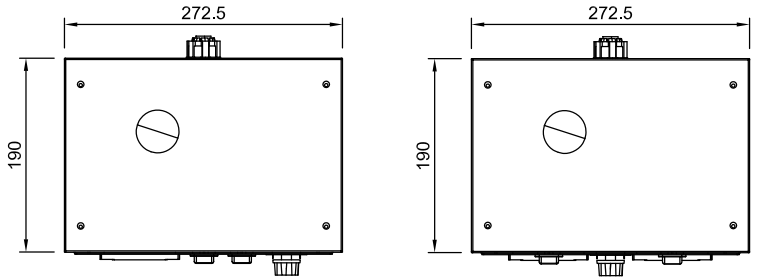

BRACKET ORDERED AS AN OPTIONAL ACCESSORY

LSCM CONTROLLER SIZES

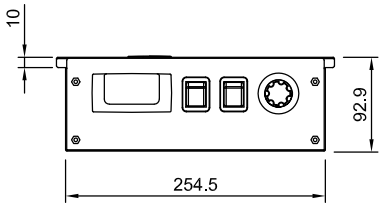

LSCM3

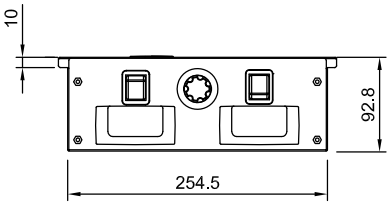

LSCM 4 -5 -6 DUAL CONTROLLER

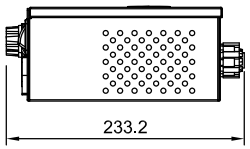

Meltica MDF panel or similar

Bracket screw fixing to panel

temp controller | lamp power | CM power | lamp dimmer

Download C.A.D models or contact us on COSSIGA.COM

SILICONE ELEMENT REPLACEMENT

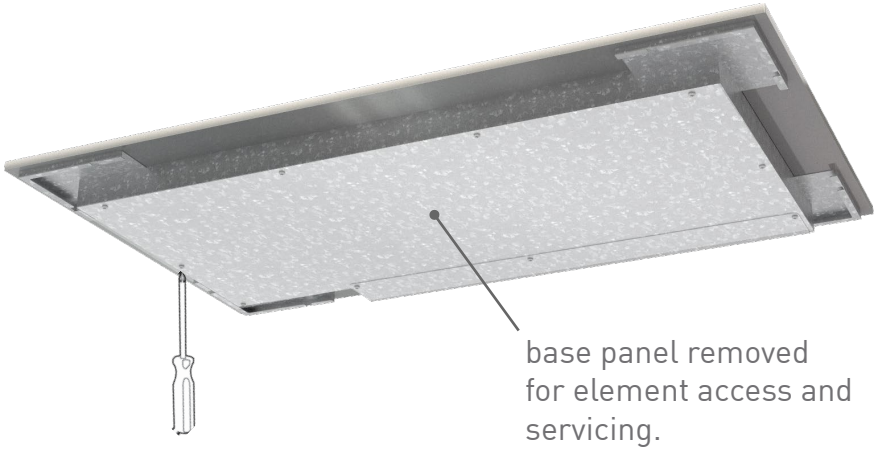

The element is accessible through the base of the unit.
Ensure to leave space to allow access for service on the under side of the unit. If no access is achievable the unit will need to be lifted out.

It is essential the silicon heat pads are replaced following our detailed instructions. Please go to the HOW TO SERVICE section in the SUPPORT page on our website or follow this QR code to find the instructions:

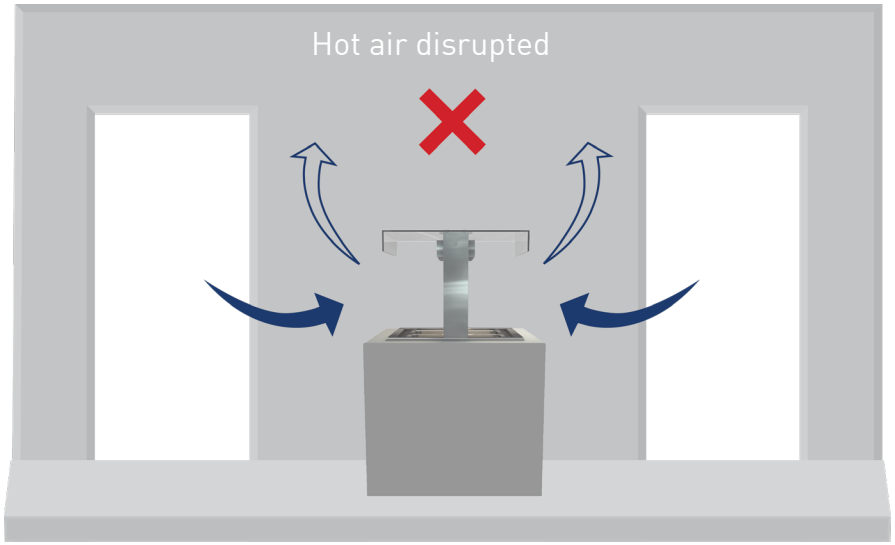

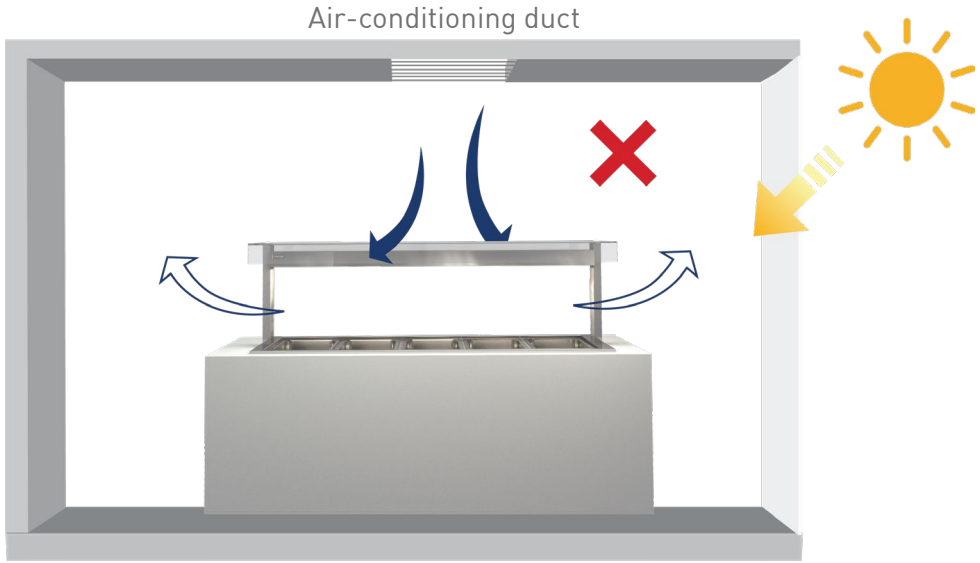

Locations to avoid

- Drafts from doorways
- Airflow from air-conditioning ducts
- Hot air from motors i.e. refrigerators
- Direct sunlight

Disrupted air flow

Heat from other equipment and natural conditions, such as direct sunlight straight on units, can cause cooling to fail and overload compressor

Mechanical air flows, such as diffusers and fans can disturb the air curtain on units causing failure

Download C.A.D models or contact us on COSSIGA.COM