JETSTREAM Plumbing

FIVE YEAR ON-SITE WARRANTY

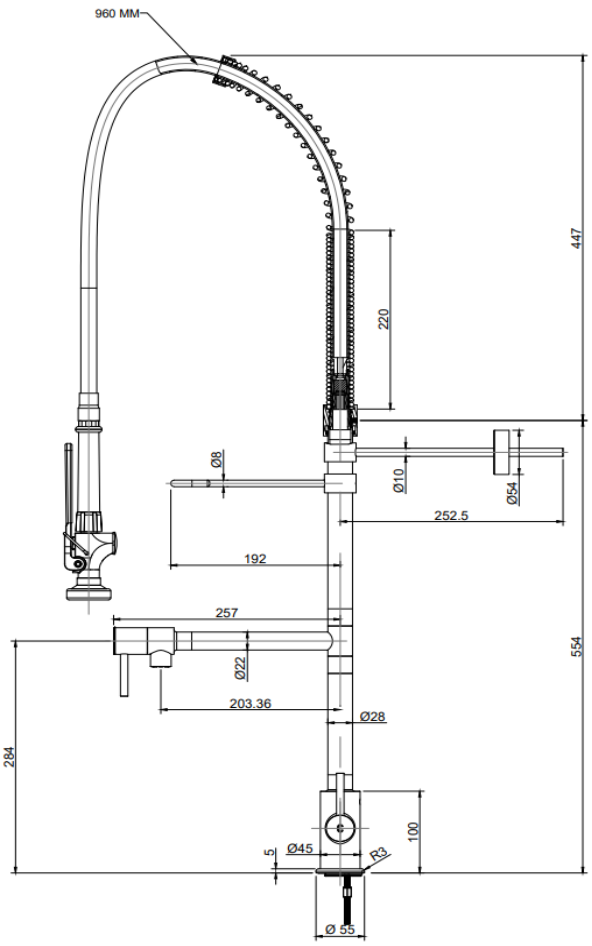

FRONT VIEW
NTS

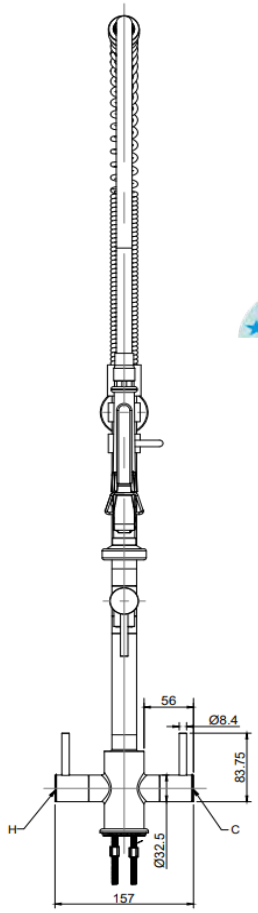

SIDE VIEW

FEATURES INCLUDE:

- Deck mounted Time Flow Tap
- Complete with wall bracket, 256mm.
- Add on swing Faucet
- 1/4 turn 100mm lever operated ceramic disc taps
- 6 Star rated spray gun
- 4 Star rated pot filler as shown
- Single hole mount.
- Overall height: 1073 mm. Hose length 845mm
- Operating water pressure Min 50KPA, Max 350KPA