Manufactured By

ROBAND AUSTRALIA PTY LTD

OPERATING INSTRUCTIONS

INFRA-RED HEATING ASSEMBLIES

Models **HE900, HE1200, HE1500, HE1800** **Version 1**

Includes

International models: **…-UK and …-F**
Fabricator models: **HUE…**

Special Features:

- Variable Heat Control
- Stylised Design
- Long-Life Metallic Elements

These instructions cover the models of ROBAND® Heat Lamps only. Although there are slight variances between models, the installation, operation, care and maintenance procedure is the same for all.

23/10/2015

Roband® Australia is a wholly Australian owned company and has been manufacturing quality commercial catering equipment for the food service industry for more than 50 years. Roband products are engineered and manufactured to the highest standards to provide functionality, reliability and durability, and our quality products are exported world-wide.

Included in the comprehensive Roband® range are Toasters, Fryers, Milkshake Mixers, Rotisseries, Food Display Cabinets and much more.

Roband® Australia also acts as the Australian agents for Vitamix® Blenders, Noaw® Meat Slicers, Förje® Cookware, Robalec™ Soup/Rice Warmers, Robatherm Urns, Austheat® Fryers, Dipo Induction & Autofry Machines. Roband also has its own line of commercial cookware and cutlery under the Robinox® brand name.

For a complete set of brochures please contact your nearest authorised dealer or contact Roband directly at our head office.

Roband Head Office

Sydney, Australia

Roband Australia Pty Ltd	**Tel:**	+61 2 9971 1788
1 Inman Road	**Fax:**	+61 2 9971 1336
Dee Why NSW 2099	**Email:**	sales@roband.com.au
AUSTRALIA	**Web:**	www.roband.com.au

International Agents

For additional agents please email Head Office

Cyprus:	United Catering Equipment Supplies Ph: +357 777 777 24	**Switzer-land:**	Burgi Infra Grill Ph: +41 418 554 552
Fiji:	Hotel Equipment Ltd Ph: +679 672 0666	**Thailand:**	Seven Five Distributors Co Ltd Ph: +662 866 5858
Hong Kong:	Chung Wah Kitchen Machine Ltd Ph: +852 2334 5411	**United Arab Emirates:**	Boncafe Middle East LLC +9714 282 8742
Malaysia:	Allied Food Equipment Ph: +603 9133 5833	**United Arab Emirates:**	Nisa Trading LLC +9714 396 6132
Maldives:	Radiant Heat Maldives Pty Ltd Ph: +960 333 4845	**United Kingdom:**	Metcalfe Catering Equipment Ph +44 1766 830 456
New Zealand:	Roband New Zealand Ph: +649 274 1354	**USA:**	Condon & Fisher International Ph: +1 508 361 9226
Noumea:	Comptoir Materiel Professionnel Ph: +687 28 50 43	**USA:**	Condon & Fisher International Ph: +1 508 361 9226
Papua New Guinea:	Brian Bell & Company Pty Ltd Ph: +675 325 5411	**NETHERLA-NDS**	AKB Bert Muller Ph: +31 306 017 442
Singapore:	Allied Foodservice Equipment Ph: +65 62525880	**GREECE**	K&N Engineers Ltd Ph: +30 210 520 0440

© Copyright 2014 – Roband® Australia Pty Ltd

All rights reserved. No part of this work may be reproduced or copied in any form or by any means, electronic or mechanical, including photocopying or posting to a website, without the written permission of the publisher. The material contained within this document is intended entirely for instructional purposes.

CONTENTS

INTRODUCTION 1
GENERAL PRECAUTIONS 1
PACKAGING 2
COMPLIANCE 2
HUE SERIES FABRICATOR MODELS 3
INSTALLATION 4
MOUNTING PROCEDURE – STANDARD MOUNTS 4
ELECTRICAL CONNECTION 6
OPERATION 7
GENERAL SAFETY 8
CLEANING, CARE & MAINTENANCE 9
ELEMENT REPLACEMENT 10
TROUBLESHOOTING 10
SPECIFICATIONS 11
HE SERIES CIRCUIT DIAGRAM 12
HUE SERIES CIRCUIT DIAGRAM 13
NOTES: 14
EC DECLARATION OF CONFORMITY 15
WARRANTY 16

INTRODUCTION

Congratulations on your purchase of this quality ROBAND® product. With proper care and management your new purchase will give you years of trouble free service.

By reading these instructions carefully you can ensure that this machine is used and maintained properly, helping your new investment to perform well for you now, and to continue performing in the many years to come.

GENERAL PRECAUTIONS

This machine must only be operated by qualified person(s) who are fully versed in the operating and safety instructions described in this manual. Operators should be instructed to familiarise themselves with any and all safety instructions described in this manual prior to commencement of any maintenance or service.

HAZARD In the case of new personnel, training is to be provided in advance. These machines should not be operated by persons (including children) with reduced physical, sensory or mental capabilities, or lack of experience or knowledge, unless they are being supervised or being instructed concerning the safe use of the appliance by a person responsible for their safety.

HAZARD These machines are heating units, and as with any commercial heating unit the surfaces on these Heating Assemblies will get **very hot**. Always be careful when near an operating Heating Assembly, and ensure that any risk to unwary customers or staff is minimised with additional signage if necessary. Due to the obvious heat hazard Roband recommends that these units be kept out of reach of children.

The performance of this unit cannot be guaranteed for operational use outside its design parameters. These Heating Assemblies are designed mainly for the heating and warming of food. They are **not** designed for the cooking of food.

HAZARD The machine should be disconnected from all power and allowed to cool before cleaning.

ROBAND WILL ACCEPT NO LIABILITY IF;

- Non-authorised personnel have tampered with the machine.
- The instructions in this manual have not been followed correctly.
- Non-original spare parts are used.
- The machine is not cleaned correctly, with the right product.
- There is any damage to the unit.

PACKAGING

Roband ensures that every unit is functional and undamaged at the time of packaging, and all care is taken.

The Package of this Heating Assembly should include:

1) One Heating Assembly (appropriate model)
2) This Manual
3) Packaging Materials

Any damage to the machine as a result of freight must be reported to the Freight Company and to the agent responsible for the dispatch of said unit within 24 hours of receipt. No claims will be accepted or entertained after this period.

CE COMPLIANCE

RCM:

Roband® products have been designed and manufactured to comply with any and all specifications set out by the Australian Communications and Media Authority (ACMA) in regards to Electromagnetic Compatibility. As testament to such compliance these units bear the RCM symbol.

For further information contact the Australian Communications Authority, PO Box 13112, Law Courts, Melbourne VIC 8010.

CE:

Roband® products bearing the CE compliance mark have been designed and manufactured to comply with European Standards and Directives. A copy of the CE Declaration of Conformity is located at the back of these instructions.

HUE SERIES FABRICATOR MODELS

If your unit is a standard HE model, please ignore the details in this section and proceed to the next section.

HUE units are provided without switches, energy regulators or control boxes. They are designed for fixed installation and should be hard wired by a trained technician or electrician in accordance with applicable standards. Installations must include accessible dual pole disconnection of mains supply, and desired temperature regulating device if required. Product is supplied with 1500mm long Active, Neutral and Earth wiring which extends outside the Heating Assembly and does not include a power plug or cord.

Operation of the appliance is to be determined in conjunction with the selected installation method and is the responsibility of the installer.

Please note that the energy regulator & knob are available for sale separately if required.

All HUE units are suited to 220-240V AC 50-60Hz Power supply.

These units will get very hot during operation. For this reason it is recommended that all care be taken to avoid damage or injury during operation. All surfaces on these units will be hot when in use.

As these Heating Assemblies are intended for use by OEM manufacturers and their application and installation are beyond Roband control, they are covered by a limited warranty against faulty workmanship and materials for a period of 12 months from date of purchase. All goods that are claimed under this warranty must be returned to the factory, freight prepaid, for inspection. Any part deemed to be defective will be replaced, however, no claims will be entertained for parts damaged in transport, misused or modified in any way without our approval.

For HUE series Heating Assemblies please continue to read this manual in full, ignoring any reference to the control box, energy regulator, cord and plug that is present on other models.

INSTALLATION

Remove all the packaging materials and tape, as well as any protective plastic from the machine. Clean off any glue residue left over from the protective plastic or tape using methylated spirit.

These Heating Assemblies are designed for mounting above food serving and preparation areas to provide HEAT **without illumination.**

We recommend mounting heights between 320mm and 450mm above the products to be heated. Note; The lower the mounting height the smaller the heated area will be and the higher the temperature. The higher the mounting height, the larger the heated area but the lower the temperature.

Warning

These units must not be installed near flammable materials or near surfaces that could be adversely affected by high temperatures. The area immediately above the Heating Assembly will become very hot when in operation.

MOUNTING PROCEDURE – STANDARD MOUNTS

STEP 1,
Hold the heat lamp in the position where it is to be mounted and mark the position of the mounting plates as shown.

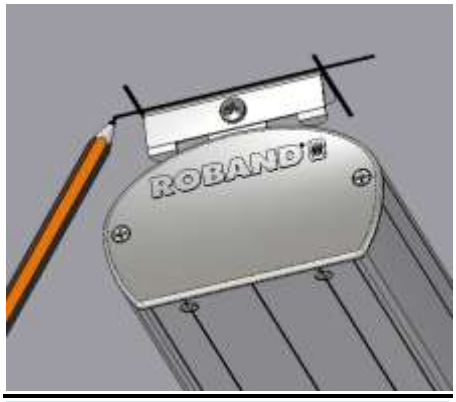

STEP 2,
Remove the mounting plates from the Heat lamp and position within the markings previously made and mark the drilling position for the holes through the slots in the plate as shown.

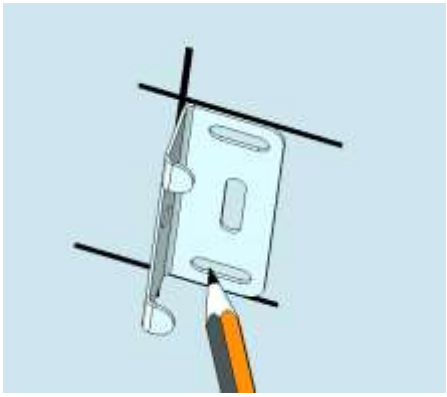

STEP 3,
Drill holes, if necessary, for the mounting screws / bolts being used, according to the fasteners specification.

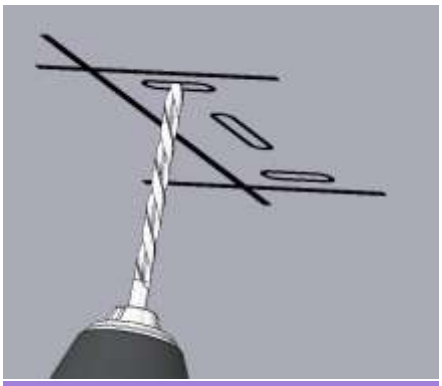

STEP 4,
Screw / bolt the mounting plates to the mounting face as shown.

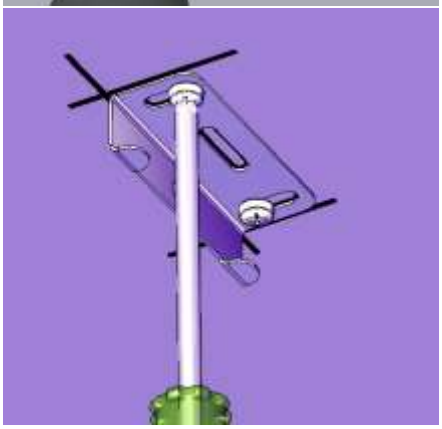

STEP 5,
Fit the heat lamp hanging brackets into the mounting plates both ends at once as shown.

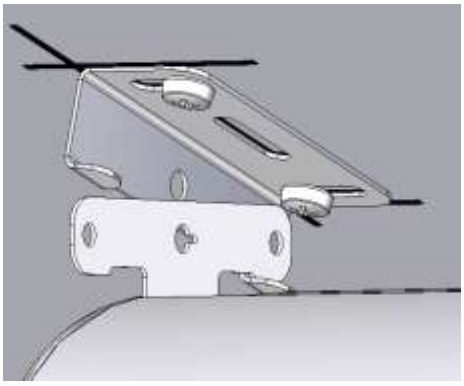

STEP 6,
Slide the heat lamp into the mounting plates and lift it up at the same time then pull the heat lamp back so that it rests on the hanging brackets as shown.

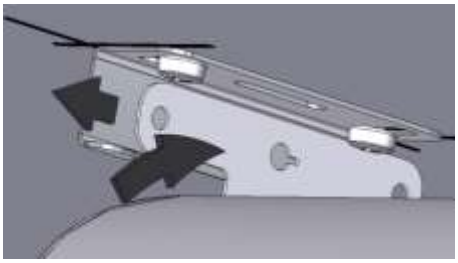

STEP 7,
Refit the screw locking the mounting plates to the Heat lamp hanging bracket. Do not excessively over tighten the locking screw.

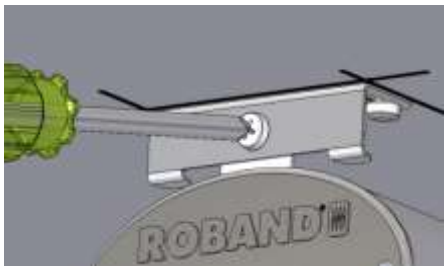

ELECTRICAL CONNECTION

Make certain that any excess cord length is kept away from the Heating Assembly body and out of the heated area.

AUSTRALIAN MODELS (HE…)

All Models come with a 1.8m power cord and will plug into a single phase, 10 Amp power point.

EXPORT MODELS (HE…-UK AND -F)

Both models come with 1.8m cord. -UK Models will plug into a standard 13 Amp United Kingdom (Type G) power point. –F Models will plug into a standard 16 Amp European (Type E or F) power point.

FABRICATOR MODELS (HUE...)

For HUE Series a suitably qualified technician/electrician must connect the lamps to the electrical supply in accordance with relevant installation standards. Please see Page 3 for further details.

OPERATION

After the heat lamps have been installed, the unit is operable and temperature controlled through the use of the energy regulator which is mounted on the outside of the switch box (HE series only).

The Energy regulator is used to control the temperature output of the heating assembly from approximately 10% of the total power on low setting to 100% of the power on maximum setting.

These units will get very hot during operation. All care should be taken to avoid operation where in areas where contact is likely to occur. All surfaces on these units will be hot when in use.

As these Heating Assemblies are intended for use by equipment manufacturers and their application and installation are beyond our control, they are only covered by a limited warranty against faulty workmanship and materials for a period of 12 months from date of purchase. All goods that are claimed under this warranty must be returned to the factory, freight prepaid, for inspection. Any part deemed to be defective will be replaced, however, no claims will be entertained for parts damaged in transport, misused or modified in any way without our approval.

SAFETY

GENERAL SAFETY

This machine contains no user-serviceable parts. Roband Australia, one of our agents, or a similarly qualified person(s) should carry out any and all repairs. Any repair person(s) should be instructed to read the Safety warnings within this manual before commencing work on these units.

Steel cutting processes such as those used in the construction of this machine result in sharp edges. Whilst any such edges are removed to the best of our ability it is always wise to take care when contacting any edge.

Particular care should be taken to avoid contact with any steel edge, and warnings should be given in regards to the danger of such contact to any repair or maintenance person(s) prior to commencement of any servicing.

Do not remove any cover panels that may be on the machine.

National Standards exist outlining the positioning, spacing and ventilation requirements when installing new appliances. These Standards should be consulted and new equipment should be installed accordingly. In any situation where specifications allow a distance of less than 100mm we would still recommend that a well-ventilated air gap of not less than 100mm be maintained on all sides and that any materials closer than 100mm be non-flammable. If the machine is near particularly heat-sensitive materials common sense should be employed in determining sufficient distancing.

Ensure that any damaged cables are replaced before further use.

Keep out of reach of children or the inept.

HAZARD This unit can get **very** hot. Ensure everyone is aware that the machine is operating and take care to avoid contact with hot surfaces.

Always ensure the power cable is not in contact with hot parts of the machine when in use.

CLEANING, CARE & MAINTENANCE

Attention to regular care and maintenance will ensure long and trouble free operation of your Heating Assembly. Although scheduled servicing is not required we do recommend you adopt a program of regular maintenance to ensure that the Heating Assembly is clean and functional and to avoid inadvertently damaging the unit.

Daily cleaning should be considered mandatory for all cooking equipment. In order to ensure the proper cleaning and to avoid damage to the Heat lamp assemblies the instructions below should be followed.

- Ensure the power is off and the Heating Assembly is cool before attempting to clean any part of the machine.
- Wipe the lamp cover down with warm soapy water using a **damp** sponge or cloth. **Do not** immerse the Heating Assembly in water.
- **Do not** let any moisture enter inside the Heating Assembly or near the metallic elements
- Always ensure the power cable is not in contact with hot parts of the Heating Assembly when in use.
- Do not clean this unit with the use of a water jet.

Although every care is taken during manufacture to remove all sharp edges, care should be taken when cleaning and handling the Heating Assembly to avoid injury.

ELEMENT REPLACEMENT

In the rare case of the element failing, it should be replaced by a qualified person such as an electrician.

TO ACCESS THE ELEMENT:

1. Turn the unit off and unplug the machine.
2. Remove the four screws from the base section underneath the element using a T20 Torx screwdriver.
3. Working from one end, squeeze the sides of the Heating Assembly together. The base section can then be pulled down with the other hand and taken off. Or insert a small flat blade screw driver into the slot provided and lever the base section off. **IMPORANT**: Ensure the base section is supported properly during removal, to ensure it does not fall down unexpectedly. Tying a string around the heat lamp at each end prior to removal will minimise the chance of losing control of the base section, particular for longer Heating Assemblies.

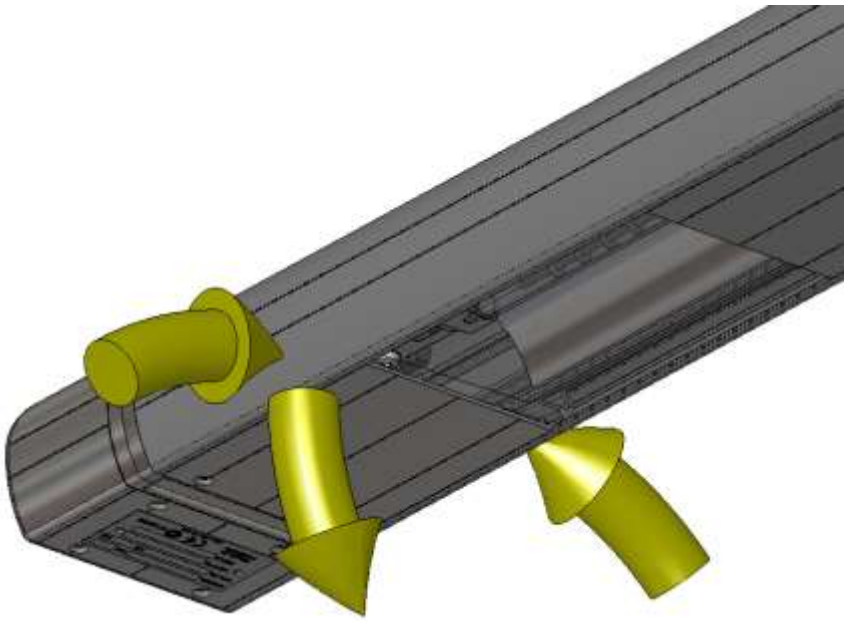

4. Replace element.
5. Snap the cover back in place and refit the four screws.
6. Tag and Test before returning to service.

TROUBLESHOOTING

If the Heating Assembly does not function check the following points before calling for service.

- ✓ The device is plugged in correctly and the power switched on.
- ✓ The power point is not faulty.

SPECIFICATIONS

			Nominal Dimensions		
Model	**Power Source**	**Power Rating**	**Length - mm**	**Width - mm**	**Height - mm**
HE900	230 Volts AC	900 Watts	900	108	87
HE1200	230 Volts AC	1200 Watts	1200	108	87
HE1500	230 Volts AC	1500 Watts	1500	108	87
HE1800	230 Volts AC	1800 Watts	1800	108	87

			Nominal Dimensions		
Model	**Power Source**	**Power Rating**	**Length - mm**	**Width - mm**	**Height - mm**
HUE825	230 Volts AC	900 Watts	825	108	65
HUE1125	230 Volts AC	1200 Watts	1125	108	65
HUE1425	230 Volts AC	1500 Watts	1425	108	65
HUE1725	230 Volts AC	1800 Watts	1725	108	65

Constant Research & Development may necessitate machine changes at any time.

HE SERIES CIRCUIT DIAGRAM

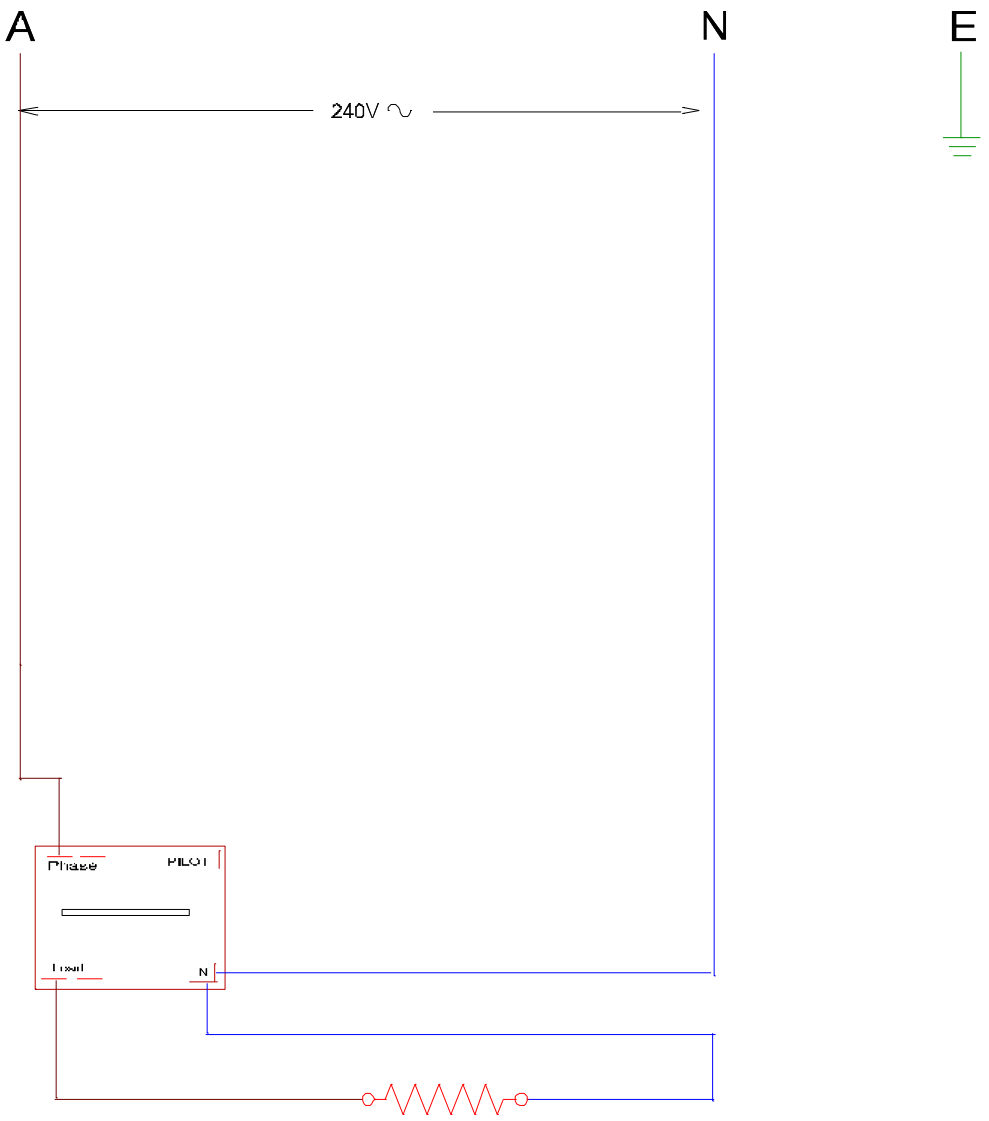

NOTE: This circuit diagram has been provided for reference and to assist qualified service and repair agents only. Under no circumstances should person's not suitably qualified attempt repairs to any electrical equipment.

HUE SERIES CIRCUIT DIAGRAM

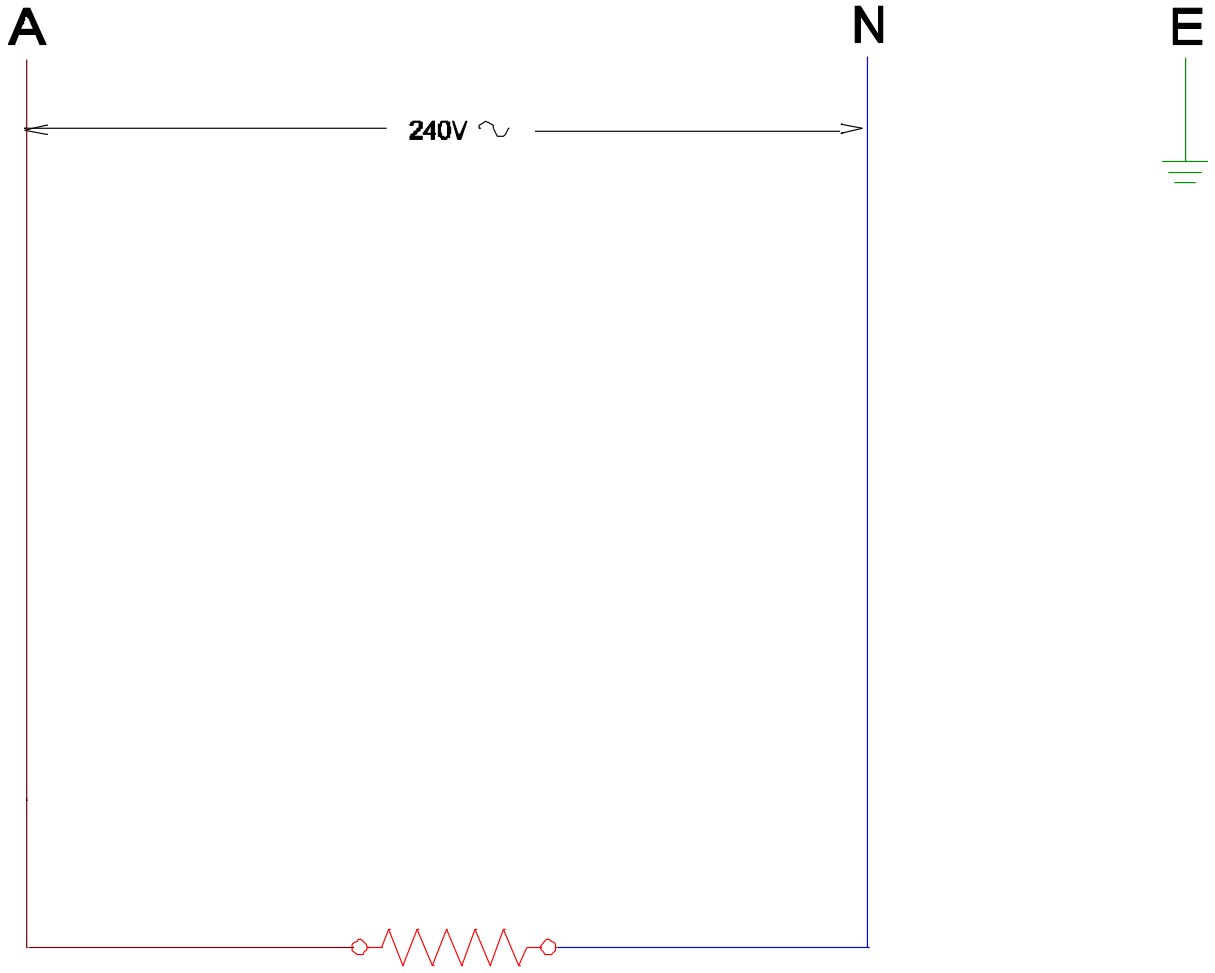

NOTE: This circuit diagram has been provided for reference and to assist qualified service and repair agents only. Under no circumstances should person's not suitably qualified attempt repairs to any electrical equipment.

NOTES:

EC DECLARATION OF CONFORMITY

Manufacturer	Roband Australia 1 Inman Rd Cromer NSW, 2099 Australia
Model Type	Extruded Aluminium Infrared Heating Assembly
Description	Heating assemblies utilising metallic infrared heating elements
Date of first CE Marking	12th September 2007
Specific Models	HE, HUE Series

STANDARDS:

This machine is designed in compliance with

- Machinery Directive 2006/42/EC
- Low Voltage Directive 2006/95/EC
- EMC Directive 89/336/EEC including amendments to 93/68/EEC
- WEEE Directive 2002/96/EC (WEEE)
- Restriction of Hazardous Substances in Electrical and Electronic Equipment 2002/95/EC (RoHS)
- EN60335.1 Household and similar Electrical Appliances
- EN60335-2-48 Commercial Electric Toasters and Grillers
- EN55014.2: 1997 Electromagnetic compatibility. Requirements for household appliances, electric tools and similar apparatus. Immunity

ENVIRONMENTAL:

This product is designed in order to contribute as little as possible to the quantity and noxious nature of waste and risk of pollution or other environmental contamination.

Packaging materials used in this machine are designed to be recyclable.

DECLARATION

I hereby declare under our sole responsibility that the product mentioned above to which this declaration relates complies with the above-mentioned standard(s).

Roband Australia has appointed Valera Ltd as our EU Authorised Representative of :
5-7 The Glade Business Centre, Eastern Ave, West Thurrock, Essex, RM203FH , UK.
Tel: 08 45 270 4321 Fax: 0845 270 4323 E-Mail : info@valera.co.uk

Signature of Authorised Person:_____ Date: 12th September 2007

Print Name: Gordon Thorpe Position: Director of Engineering

WARRANTY

Every care is taken to ensure that no defective equipment leaves our factory and all goods manufactured by us are guaranteed against defective workmanship and materials for a period of 12 months from the date of purchase. Roband Australia's obligations pursuant to this express warranty being limited to the repair or replacement of the defective goods or materials, at is option and subject to the terms contained within this Warranty statement. Where relevant, glass, Teflon® and lamps are **not** included in this warranty and RCD tripping due to moisture absorption by Tubular Heating Elements is not considered a warranty fault.

Generally, all goods claimed under this warranty must be returned to the factory or an authorized service agent, freight prepaid, for inspection. All parts deemed to be defective will be replaced, however, no claims will be entertained for second hand products, or parts damaged in transport, misused or modified in any way without our approval. For machines that are not considered to be portable (e.g. food bars, rotisseries, large hotplates and some bain maries), on site warranty service will be provided in capital city metropolitan areas only. In all other locations, the customer is responsible for all travelling time/service call costs and payment for this will be required prior to the commencement of the repair. The labour costs to actually repair the fault will be met by the company.

Any repairs or replacement of defective goods or materials pursuant to this warranty, must be authorized by Roband Australia prior to any action being taken. The company reserves the right to reject a claim for warranty if it is not completely satisfied with the circumstances under which it occurred and any other costs incurred for false claims or faults due to incorrect usage etc. are the responsibility of the claimant. Roband Australia Pty Ltd nor any subsidiary company or Agent shall be liable for loss of profit or damage to other equipment and property except where it is in breach of the guarantees provided in accordance with Schedule 2 of the Competition and Consumer Act 2010 (Cth) or the applicable legislation from time to time.

The goods come with guarantees that cannot be excluded under the Australian Consumer Law (ACL). You are entitled to a replacement or refund for a major failure and for compensation for any other reasonably forseeable loss or damage. You are also entitled to have the goods repaired or replaced if they fail to be of acceptable quality and the failure does not constitute a major failure.

Generally, authorized service agents are located in all areas which have authorized distribution dealers. For the name of your nearest Australian authorised service agent, please contact:

Roband Australia Pty Ltd

1 Inman Road, Cromer, NSW 2099

Warranty Number: 1800 268 848

Phone: (02) 9971 1788 Fax: (02) 9971 1336

All other countries please contact your selling Agent.

Please complete the following details and keep this card in a safe place.

NAME_____

ADDRESS_____

MODEL No:_____SERIAL No: _____DATE PURCHASE_____

NAME OF DEALER:_____

PLEASE RETAIN THIS SECTION FOR YOUR RECORDS

DO NOT POST

ROBAND® AUSTRALIA PTY LTD

OTHER LEADING PRODUCTS AVAILABLE:

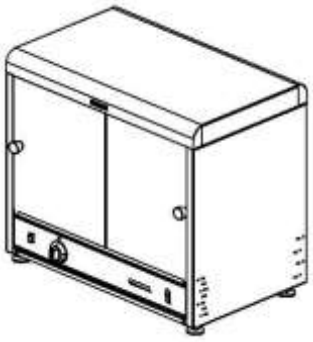

π-PLUS
PIE & FOOD WARMERS

DRINK MIXERS

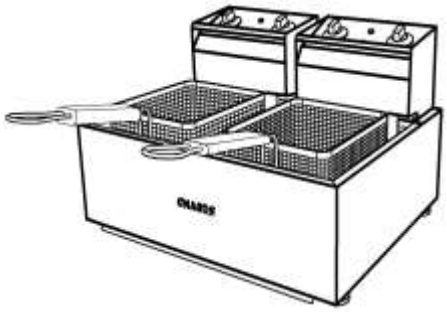

HIGH PERFORMANCE DEEP FRYERS

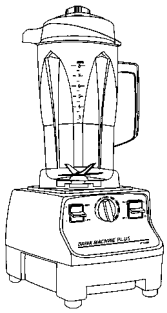

VITAMIX BLENDERS

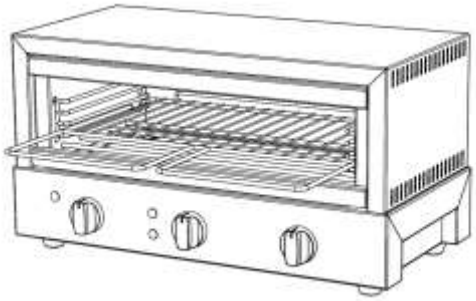

GRILLMAX TOASTERS

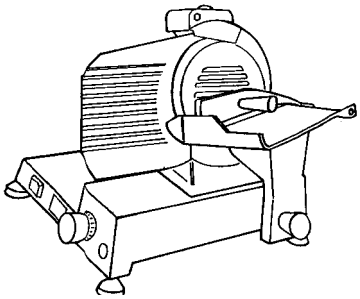

NOAW Slicers

Manufactured/Imported in Australia by:

ROBAND AUSTRALIA PTY LTD

Authorised Distributor/Agent