GOG TOWER TOWER COUNTER SERIES

cossiga

RF

GOGRF9
GOGRF12
GOGRF15

- Double glazed, condensation free, glass on glass construction
- Sliding double glazed rear doors argon filled
- Deck forced refrigeration
- Double glazed with painted edges
- Adjustable glass shelf (additional shelf available)
- Ticket strips on shelf and deck
- Under shelf and canopy LED lights
- Integral condenser, self evaporating

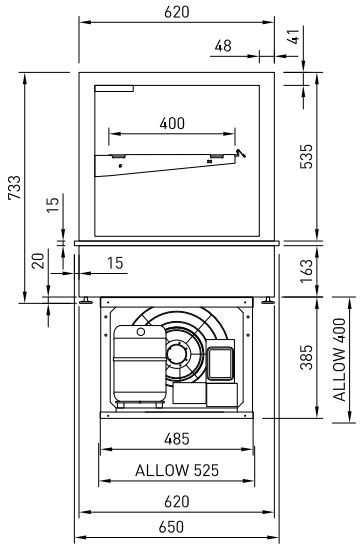

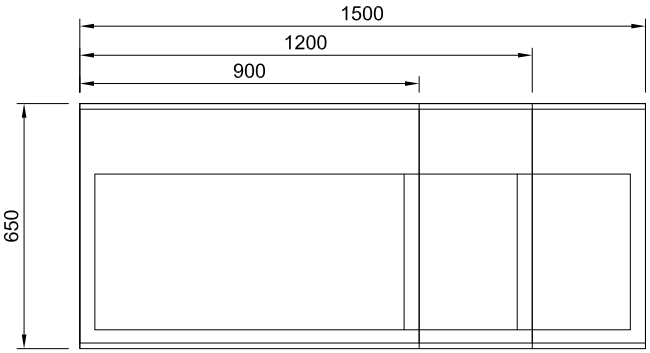

GOG height and hinging system matches LS- FS glass profile

HT

GOGHT9

- Deck forced heating
- Single glazed glass with front tilting hinged glass
- Sliding glazed rear doors
- Deck forced heating
- Two adjustable shelves
- Ticket strips on shelf and deck
- Under shelf and canopy LED lights

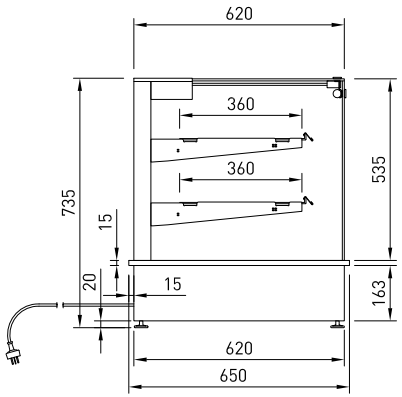

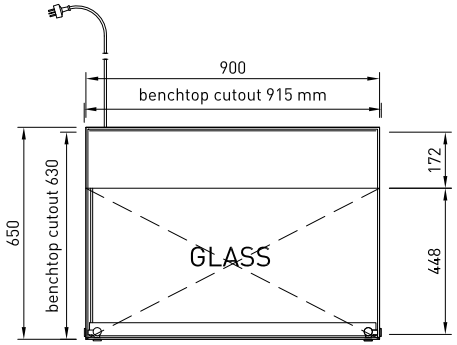

Date Modified: 31/07/25 Check website for latest version

Download C.A.D models or contact us on COSSIGA.COM

CABINET DIMENSIONS & SPECIFICATIONS

MODEL	CABINET			SHELVING	SHELVING	OPERATING TEMP	SHELF	BASE TRAY	TOTAL FOOD	DISPLAY M^2	INTERNAL VOLUME M^3	FREQUENCY	REFRIGERANT	POWER		CONNECTION ELECTRICAL POWER CORD 2200MM		VOLTAGE	PACKED FOR SHIPPING			
	LENGTH [MM]	DEPTH [MM]	HEIGHT [MM]	WEIGHT KG		DEG C	W X D	W X D	100MM UNITS					KWH	AMP	NZ/AUS 10 AMP	UK 13 AMP		LENGTH [MM]	DEPTH [MM]	HEIGHT [MM]	WEIGHT
GOGRF9	900	650	733	142	1 + BASE	3-9	790 X 430	750 X 410	72	0.64	0.45	50 Hz	R290	1.10	4.6	3 PIN PLUG	3 PIN PLUG	220-240V	1000	750	1255	149
GOGRF12	1200	650	733	170	1 + BASE	3-9	1090 X 430	1050 X 410	99	0.89	0.60	50 Hz	R290	1.10	4.7	3 PIN PLUG	3 PIN PLUG	220-240V	1300	750	1255	177
GOGRF15	1500	650	733	195	1 + BASE	3-9	1390 X 430	1350 X 410	126	1.130	0.75	50 Hz	R290	1.11	4.8	3 PIN PLUG	3 PIN PLUG	220-240V	1600	750	1255	202
GOGHT9	900	650	733	99	2+ BASE	68 -80	787 X 430	770 X 410	96	0.65	0.91	50 Hz	N/A	1.24	5.4	3 PIN PLUG	3 PIN PLUG	220-240V	1000	750	1100	106

Maximum shelf load weight 15kg spread evenly

GOG TOWER JOINERY AIRFLOW CONSIDERATIONS

cossiga

REAR VIEW

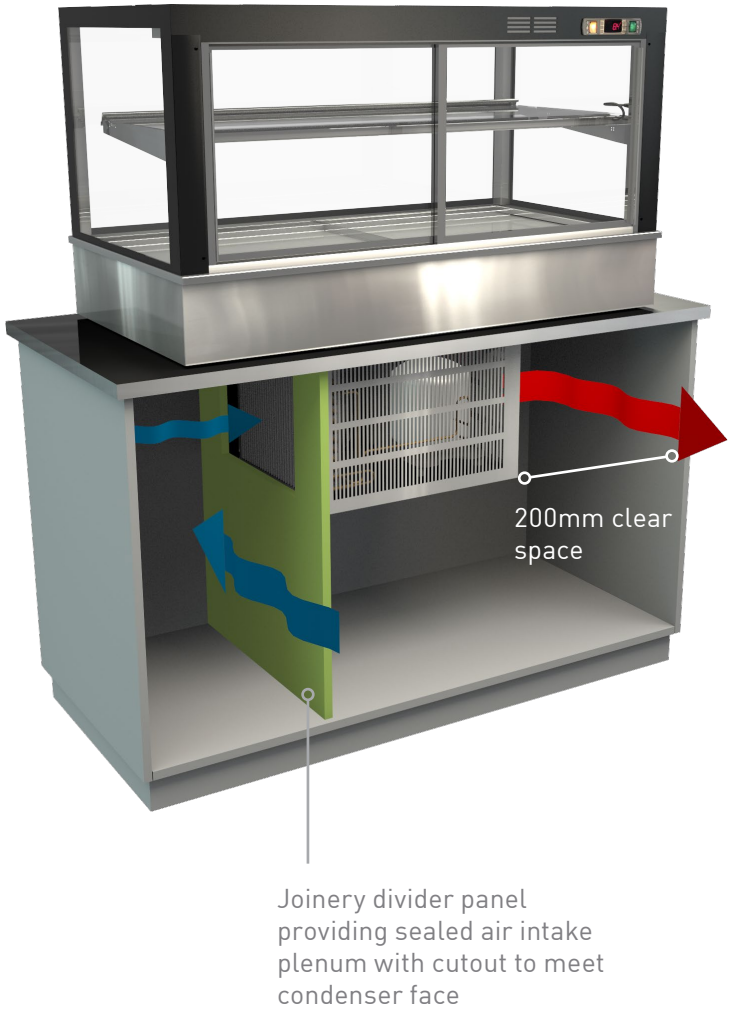

Hole Cut to meet condenser face

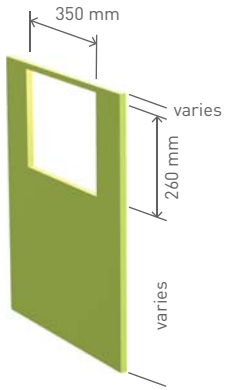

UNITS SHOWEN FROM REAR VIEW

REAR VIEW

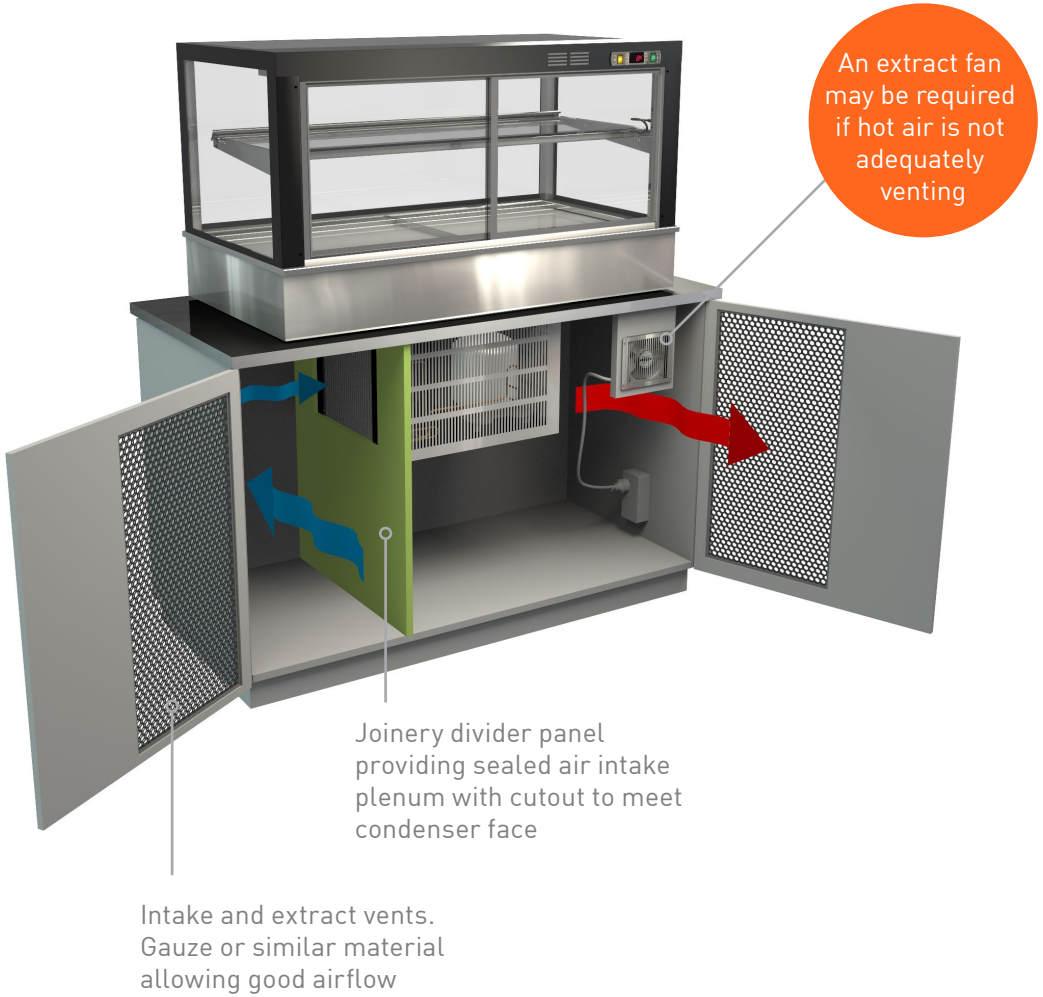

Ideal configuration cabinet open at rear

Cabinet with vented rear doors

Date Modified: 31/07/25 Check website for latest version

Download C.A.D models or contact us on COSSIGA.COM

cossiga

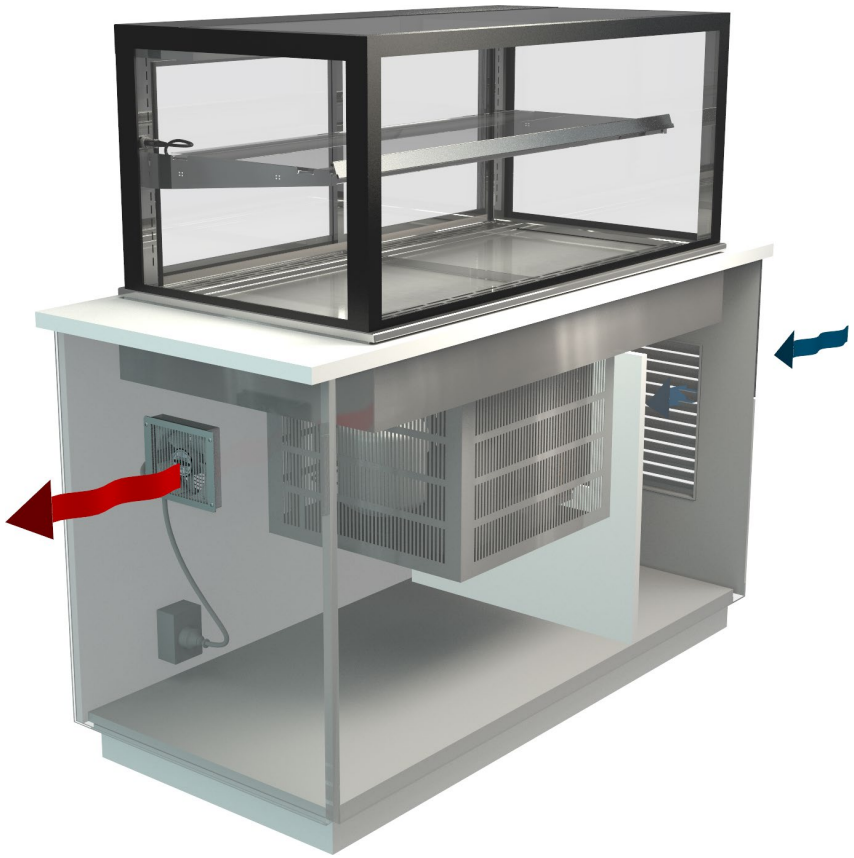

EXTRACTION FAN

- Extract hot air from box joinery
- Fan and power cable supplied, screw fixed to joinery
- Electrical power cord 2000mm 3 pin 10 amp 1 phase socket required
- Fan 230v ~ 50Hz - 60Hz - 19 Watt in stainless steel case
- Cossiga part number X000611 Extraction Fan

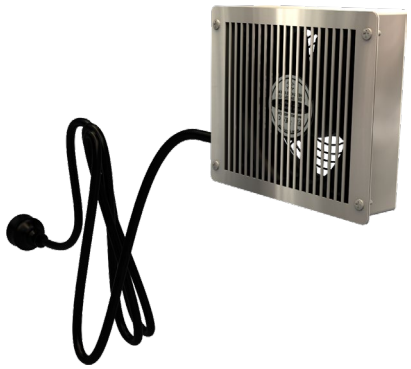

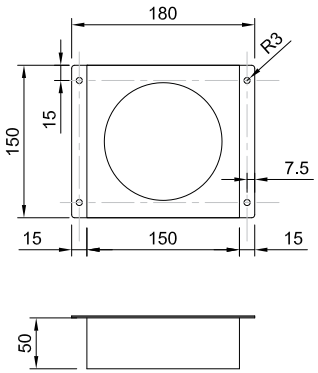

VENTILATION GRILLE

- Stainless steel construction
- Hole cut out size 540 mm x 298 mm
- Square grille holes 10mm x 10mm
- Cossiga part number X000765 Ventilation Grill
  Screws not included

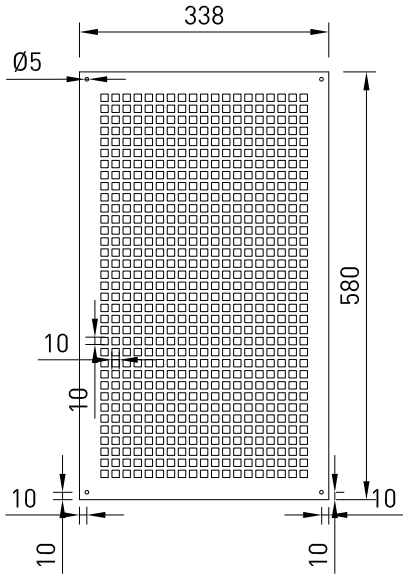

Download C.A.D models or contact us on COSSIGA.COM

GOG TOWER GOG DROP IN COUNTER CUT OUT DETAILS

cossiga

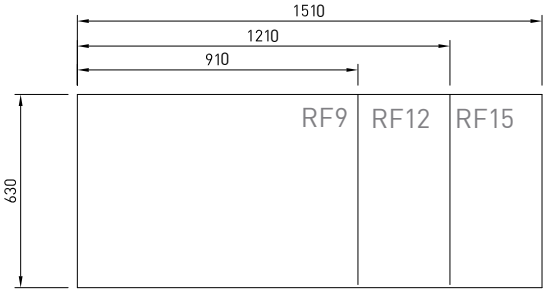

benchtop cut out sizes

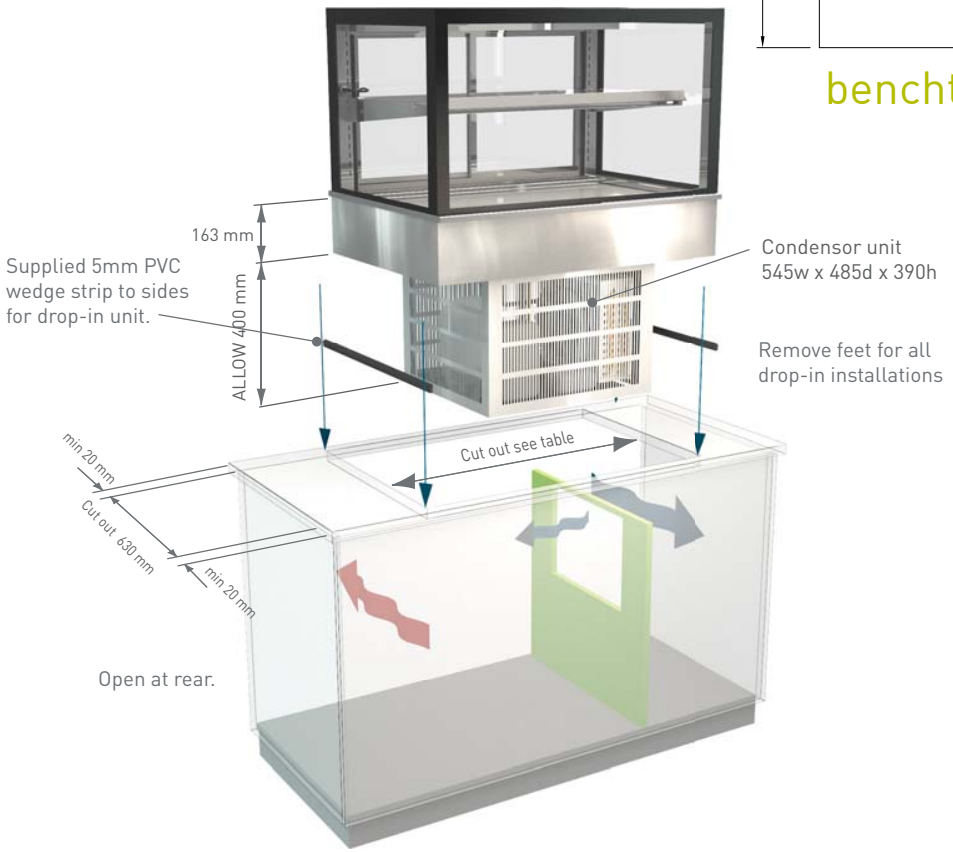

Full bench top drop in

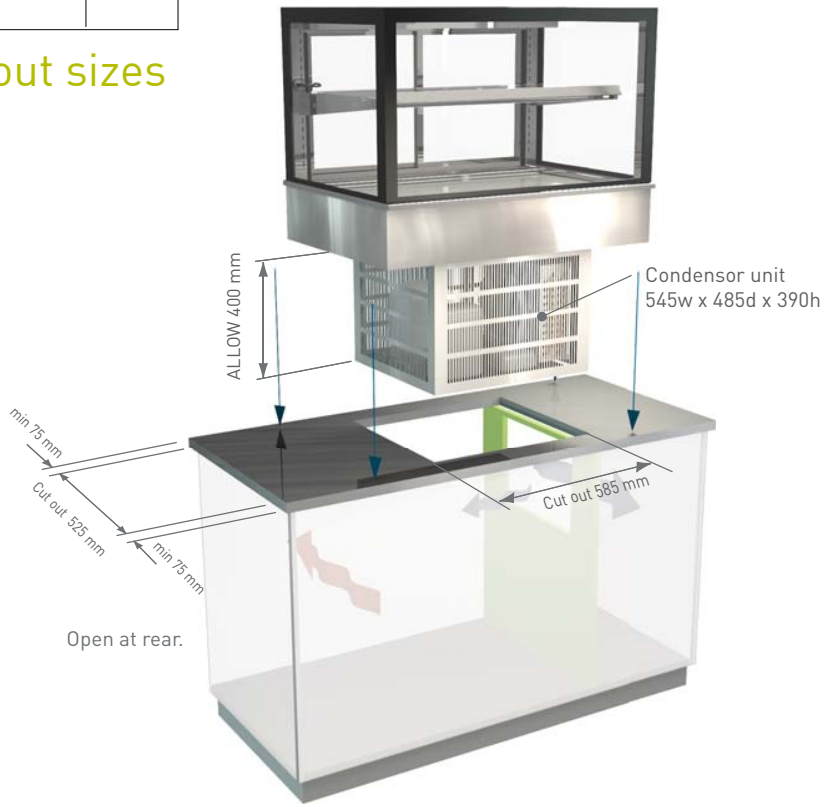

On bench top drop in

Date Modified: 31/07/25 Check website for latest version

Download C.A.D models or contact us on COSSIGA.COM

THESE UNITS ARE HEAVY AND REQUIRE LIFTING INTO BENCH TOPS

PROTECT BENCHTOP

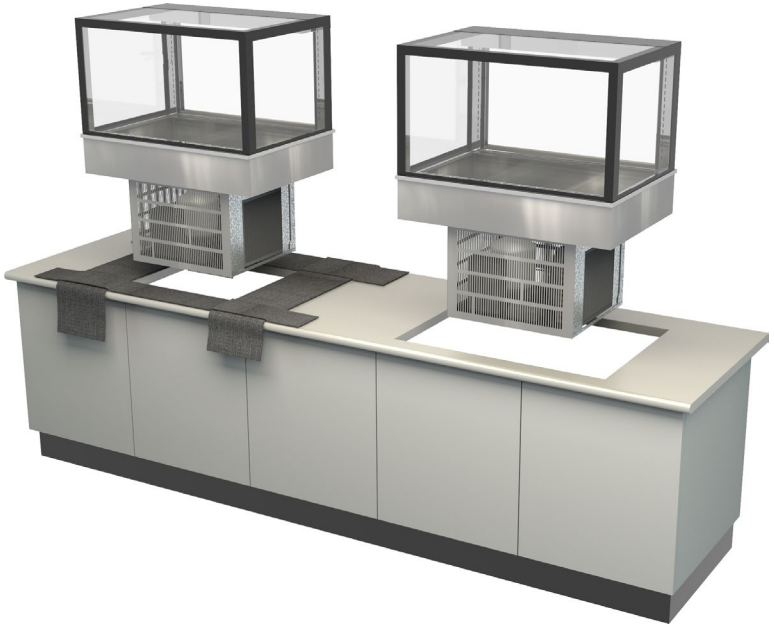

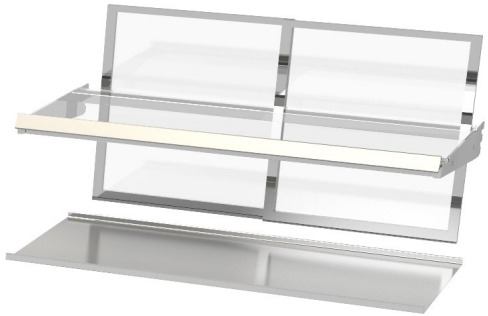

REMOVE

To reduce weight remove
- All doors
- Shelving
- Base plates

PLAN AHEAD

- Have plenty of labour on hand
- Use a mechanical lifting device - optional
- Check bench top hole measurement
- Ensure enough clear depth in cabinet work
- Protect bench top with a mat or similar
- Pre-adjust unit feet if needed

All accepted local safety work wear and standards should be adhered to with a safety programme developed before undertaking of this kind of lifting work

LIFT TO BENCH AND REST

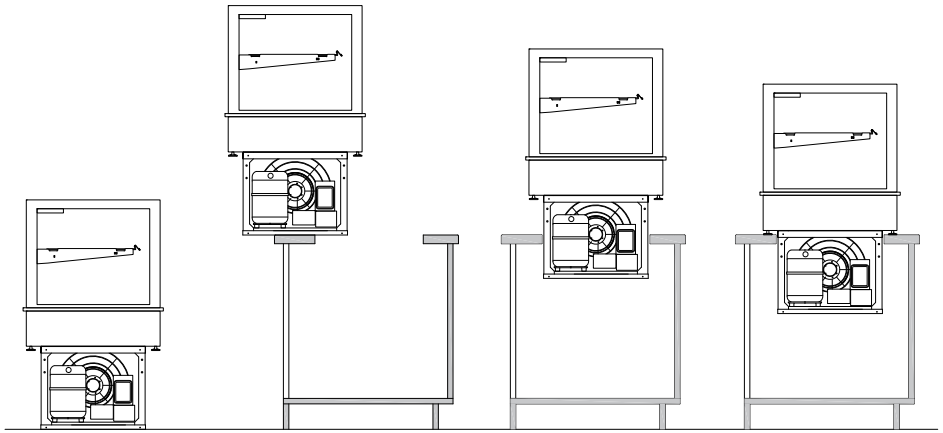

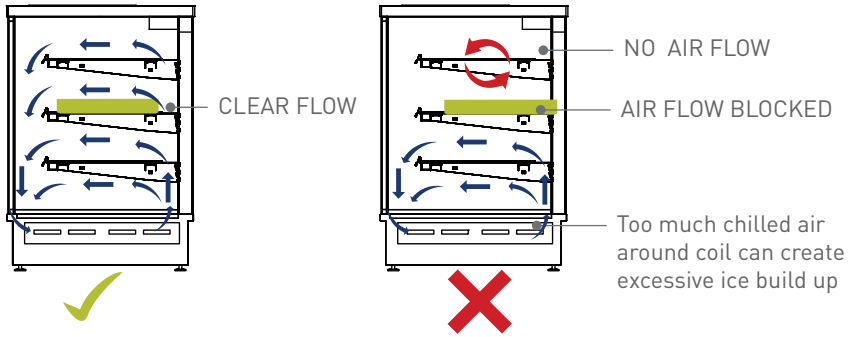

CORRECT AIRFLOW

IN CORRECT AIRFLOW

- Blocked air flow will retard operation on both HOT and COLD units
- Ensure trays or plates are not blocking air flow at rear

Locations to avoid

- Close to shop front exterior
- In an outside location
- In direct sunlight
- In a high wind
- Near any source producing excessive heat
- Service units more frequently in dusty or polluted areas

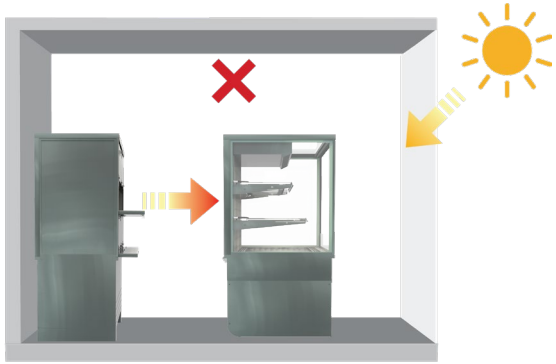

Environmental conditions

Heat from other equipment and natural conditions, such as direct sunlight straight on units, can cause cooling to fail and overload compressor